Worldwide Air Conditioner Partner

Installation and owner’s Manual

R290 Tri-thermal Ultra Mono Series



tcl-tekniikka.fi

CONTENTS

1 Safety Precautions.....01

2 General Introduction..... 14

3 Important Information For The Refrigerant..... 16

4 Unit Installation..... 17

5 Hydraulic Installation 28

6 Electrical Installation.....34

7 Test Run And Final Checks.....51

8 Maintenance And Service.....52

9 Turn Over To Customer.....53

10 Operation And Performance.....54

11 Error Codes.....56

12 Technical Specifications.....61

13 Servicing Information.....73

1 Safety Precautions

The precautionslisted hereare divided into the following types. They are quite important, so be sure to follow them carefully.

Read these instructions carefully before installation. Keep this manual safe for future reference.

INFORMATION

- Read these instructions carefully before installation. Keep this manual handy for future reference.
- Improper installation of equipment or accessories may result in electric shock, short-circuit, leakage, fire or other damage to the equipment.
- Be sure to only use accessories made by the supplier, which are specifically designed for the equipment and ensure that the installation is completed by professionals.
- All the activities described in this manual must be carried out by licensed technicians. Be sure to wear adequate personal protection equipment such as gloves and safety glasses while installing the unit or carrying out maintenance activities.
- Contact your dealer for any further assistance.

The installation of a residual current device (RCD) having a rated residual operating current not exceeding 30 mA is advisable.

- On use, transportation, assembly, dismantling when out of service, testing or foreseeable breakdowns, if these operations have consequences on stability of the appliance in order to avoid overturning,falling or uncontrolled movements of the appliance or of its component parts;
- On how to maintain adequate mechanical stability when in use, during transportation, assembly, dismantling, scrapping and any other action involving the appliance;
- On the protective measures to be taken by the user, including, where appropriate, the personal protective equipment to be provided;
- On the operating method to be followed in the event of accident or breakdown; if a blockage is likely to occur the operating method to safely unblock the appliance;
- On the specifications on the spare parts to be used, when these affect the health and safety of theoperator;

The A-weighted emission sound pressure level is ≤ 70 dB.

Meanings of DANGER, WARNING, CAUTION and NOTE symbols.

D A N G E R

Indicates a hazard with a high level of risk which, if not avoided, will result in death or serious injury.

WARNING

Indicates a hazard with a medium level of risk which, if not avoided, could result in death or serious injury.

CAUTION

Indicates a hazard with a low level of risk which, if not avoided, could result in minor or moderate injury.

N O T E

Additional information.

Target Group

DANGER

These instructions are exclusively intended for qualified contractors and authorized installers.

- Work on the refrigerant circuit with flammable refrigerant in safety group A3 may only be carried out by authorized heating contractors. These heating contractors must provide a certificate of competence from an industry accredited body.
- Brazing/soldering work on the refrigerant circuit may only be carried out by certified professionals. And only contractors qualified and certified for the processes can perform brazing/soldering work. The work must fall within the range of applications purchased and be carried out in accordance with the prescribed procedures. Soldering/brazing work on accumulator connections requires certification of personnel and processes by an accredited body.
- Work on electrical equipment may only be carried out by a qualified electrician.
- Only certified personnel are allowed to do installation, operation and maintenance.

⚠ DANGER

- Before initial commissioning, all safety related points must be checked by the particular certified heating contractors. The system must be commissioned by the system installer or a qualified person authorized by the installer.
- Be sure to only use accessories made by the supplier, which are specifically designed for the equipment and make sure to get installation done by a certified person.
- Be sure to wear adequate personal protection equipment such as gloves and safety glasses while installing the appliances or carrying out maintenance activities.

Safety Precautions For The Appliances Using Flammable Refrigerant

The following precautions should be complied with during installation, service, maintenance and repair, and decommissioning of appliances using flammable refrigerant.

⚠ WARNING

- This appliance employed A3 flammable refrigerant R290. The appliance shall be stored so as to prevent mechanical damage from occurring.
- Do not use means to accelerate the defrosting process or to clean, other than those recommended by the manufacturer.
- The appliance shall be stored in a room without continuously operating ignition sources (for example: Open flames, an operating gas appliance or an operating electric heater).
- Do not pierce or burn.
- Be aware that refrigerants might not contain an odour.

Installation

Refer to Target group described in chapter 1 SAFETY PRECAUTION. Every working procedure that affects safety measures shall only be carried outby competent persons.

⚠ WARNING

- Protection devices, piping and fittings shall be protected as far as possible against adverse environmental effects, for example the danger of water collecting and freezing in relief pipes or the accumulation of dirt and debris;
- Provision shall be made for expansion and contraction of long runs of piping;
- Piping in systems shall be so designed and installed as to minimize the likelihood of hydraulic shock damaging the system;
- Steel pipes and components shall be protected against corrosion with a rustproof coating before applying any insulation.

Information On Servicing

1 General

⚠ CAUTION

Servicing shall be performed only as recommended by the manufacturer.

2 Checks To The Area

Prior to beginning work on systems containing flammable refrigerants, safety checks are necessary to ensure that the risk of ignition is minimized.

3 Work Procedure

Work shall be undertaken under a controlled procedure so as to minimize the risk of a flammable gas or vapour being present while the work is being performed.

4 General Work Area

All maintenance staff and others working in the local area shall be instructed on the nature of work being carried out. Work in confined spaces shall be avoided.

The area around the workspace shall be sectioned off. Ensure that the conditions within the area have been made safe by control of flammable material.

5 Checking For Presence Of Refrigerant

The area shall be checked with an appropriate refrigerant detector prior to and during work, to ensure the technician is aware of potentially toxic or flammable atmospheres. Ensure that the leak detection equipment being used is suitable for use with all applicable refrigerants, i.e. non-sparking, adequately sealed or intrinsically safe.

6 Presence Of Fire Extinguisher

If any hot work is to be conducted on the refrigerating equipment or any associated parts, appropriate fire extinguishing equipment shall be available to hand. Have a dry powder or CO2 fire extinguisher adjacent to the charging area.

7 No Ignition Sources

No person carrying out work in relation to a refrigerating system which involves exposing any pipe work shall use any sources of ignition in such a manner that it can lead to the risk of fire or explosion. All possible ignition sources, including cigarette smoking, should be kept sufficiently far away from the site of installation, repairing, removing and disposal, during which refrigerant can possibly be released to the surrounding space. Prior to work taking place, the area around the equipment is to be surveyed to make sure that there are no flammable hazards or ignition risks. "No Smoking" signs shall be displayed.

8 Ventilated Area

Ensure that the area is in the open or that it is adequately ventilated before breaking into the system or conducting any hot work. A degree of ventilation shall continue during the period that the work is carried out. The ventilation should safely disperse any released refrigerant and preferably expel it externally into the atmosphere.

9 Checks To The Refrigerating Equipment

Where electrical components are being changed, they shall be fit for the purpose and to the correct specification. At all times the manufacturer’s maintenance and service guidelines shall be followed. If in doubt, consult the manufacturer’s technical department for assistance.

The following checks shall be applied to installations using flammable refrigerants:

– The refrigerant charge is in accordance with the room size within which the refrigerant containing parts are installed;

– The ventilation machinery and outlets are operating adequately and are not obstructed;

– If an indirect refrigerating circuit is being used, the secondary circuit shall be checked for the presence of refrigerant;

– Marking to the equipment continues to be visible and legible. Markings and signs that are illegible shall be corrected;

– Refrigerating pipe or components are installed in a position where they are unlikely to be exposed to any substance which can corrode refrigerant containing components, unless the components are constructed of materials which are inherently resistant to being corroded or are suitably protected against being so corroded.

10 Checks To Electrical Devices

Repair and maintenance to electrical components shall include initial safety checks and component inspection procedures. If a fault exists that could compromise safety, then no electrical supply shall be connected to the circuit until it is satisfactorily dealt with. If the fault cannot be corrected immediately but it is necessary to continue operation, an adequate temporary solution shall be used. This shall be reported to the owner of the equipment so all parties are advised.

Initial safety checks shall include:

– That capacitors are discharged: this shall be done in a safe manner to avoid possibility of sparking;

– That no live electrical components and wiring are exposed while charging, recovering or purging the system;

– That there is continuity of earth bonding.

Explanation Of Symbols Displayed On The Monobloc

	WARNING	This symbol shows that this appliance uses a flammable refrigerant. If the refrigerant is leaked and exposed to an external ignition source, there is a risk of fire.
	CAUTION	This symbol shows that the operation manual should be read carefully.
	CAUTION	This symbol shows that service personnel should be handling this equipment with reference to the installation manual.
	CAUTION	This symbol shows that information is available such as the operating manual or installation manual.

Sealed Electrical Components

⚠ WARNING

Sealed electrical components shall not be repaired.

Cabling

Checkthatcabling will not be subject to wear, corrosion, excessive pressure, vibration, sharp edges or any other adverse environmental effects. The check shall also take into account the effects of aging or continual vibration from sources such as compressors or fans.

Detection Of Flammable Refrigerants

Under no circumstances shall potential sources of ignition be used in the searching for or detection of refrigerant leaks. A halide torch (or any other detector using a naked flame) shall not be used.

The following leak detection methods are deemed acceptable for all refrigerant systems.

Electronic leak detectors may be used to detect refrigerant leaks but, in the case of flammable refrigerants, the sensitivity can be inadequate, or can need re-calibration. (Detection equipment shall be calibrated in a refrigerant-free area.) Ensure that the detector is not a potential source of ignition and is suitable for the refrigerant used. Leak detection equipment shall be set at a percentage of the LFL of the refrigerant and shall be calibrated to the refrigerant employed, and the appropriate percentage of gas (25 % maximum) is confirmed.

Leak detection fluids are also suitable for use with most refrigerants but the use of detergents containing chlorine shall be avoided as the chlorine can react with the refrigerant and corrode the copper pipe-work.

NOTE Examples of leak detection methods are

– Bubble method.

– Fluorescent agent method.

If a leak is suspected, all naked flames shall be removed/extinguished.

If a leakage of refrigerant is found which requires brazing, all of the refrigerant shall be recovered from the system, or isolated (by means of shut-off valves) in a part of the system remote from the leak.

⚠ CAUTION

Oxygen free nitrogen (OFN) shall then be purged through the system both before and during the brazing process.

Refrigerant Removal And Circuit Evacuation

When breaking into the refrigerant circuit to make repairs or for any other purpose, conventional procedures shall be used. However, for flammable refrigerants it is important that best practice is followed since flammability is a consideration. The following procedure shall be adhered to:

– Safely remove refrigerant following local and national regulations;
– Evacuate;
– Purge the circuit with inert gas;
– Evacuate;
– Continuously flush with inert gas when using flame to open circuit;
– Open the circuit.

The refrigerant charge shall be recovered into the correct recovery cylinders.

⚠ CAUTION

An inert gas, specifically, is dry oxygen free nitrogen (OFN).
The system shall be “flushed” with OFN to render the unit safe. This process may need to be repeated several times.

Compressed air or oxygen shall not be used for purging refrigerant systems.

Purging of the refrigerant circuit shall be achieved by breaking the vacuum in the system with inert gas and continuing to fill until the working pressure is achieved, then venting to atmosphere, and finally pulling down to a vacuum. This process shall be repeated until no refrigerant is within the system. The system shall be vented down to atmospheric pressure to enable work to take place.

⚠ CAUTION

This operation is absolutely vital if brazing operations on the pipework are to take place.

Ensure that the outlet of the vacuum pump is not close to any potential ignition sources and that ventilation is available.

Charging Procedures

In addition to conventional charging procedures, the following requirements shall be followed.

– Ensure that contamination of different refrigerants does not occur when using charging equipment. Hoses or lines shall be as short as possible to minimise the amount of refrigerant contained in them.
– Cylinders shall be kept in an appropriate position according to the instructions.
– Ensure that the refrigerating system is earthed prior to charging the system with refrigerant.
– Label the system when charging is complete (if not already labelled).
– Extreme care shall be taken not to overfill the refrigerating system.

Prior to recharging the system, it shall be pressure-tested with the appropriate purging gas. The system shall be leak-tested on completion of charging but prior to commissioning. A follow up leak test shall be carried out prior to leaving the site.

Decommissioning

Before carrying out this procedure, it is essential that the technician is completely familiar with the equipment and all its detail. It is recommended good practice that all refrigerants are recovered safely. Prior to the task being carried out, an oil and refrigerant sample shall be taken in case analysis is required prior to re-use of recovered refrigerant. It is essential that electrical power is available before the task is commenced.

1) Become familiar with the equipment and its operation.

2) Isolate system electrically.

3) Before attempting the procedure, ensure that:

a) Mechanical handling equipment is available, if required, for handling refrigerant cylinders;

b) All personal protective equipment is available and being used correctly;

c) The recovery process is supervised at all times by a competent person;

d)Recovery equipment andcylindersconformtotheappropriatestandards.

4) Pumpdown refrigerant system,ifpossible.

5) If a vacuum is not possible, make a manifold so that refrigerant can be removed from various parts of the system.

6) Make sure that the cylinder is situated on the scales before recovery takes place.

7) Start the recovery machine and operate in accordance with instructions.

8) Do not overfill cylinders (no more than 80 % volume liquid charge).

9) Do not exceed the maximum working pressure of the cylinder, even temporarily.

10) When the cylinders have been filled correctly and the process completed, make sure that the cylinders and the equipment are removed from site promptly and all isolation valves on the equipment are closed off.

11) Recovered refrigerant shall not be charged into another refrigerating system unless it has been cleaned and checked.

Labelling

Equipment shall be labelled stating that it has been de-commissioned and emptied of refrigerant. The label shall be dated and signed. For appliances containing flammable refrigerants, ensure that there are labels on the equipment stating the equipment contains flammable refrigerant.

Recovery

When removing refrigerant from a system, either for servicing or decommissioning, it is required to follow good practice so that all refrigerants are removed safely.

When transferring refrigerant into cylinders, ensure that only appropriate refrigerant recovery cylinders are employed. Ensure that the correct number of cylinders for holding the total system charge is available. All cylinders to be used are designated for the recovered refrigerant and labelled for that refrigerant (i.e. special cylinders for the recovery of refrigerant). Cylinders shall be complete with pressure-relief valve and associated shut-off valves in good working order. Empty recovery cylinders are evacuated and, if possible, cooled before recovery occurs.

The recovery equipment shall be in good working order with a set of instructions concerning the equipment that is at hand and shall be suitable for the recovery of the flammable refrigerant. Consult manufacturer if in doubt. In addition, a set of calibrated weighing scales shall be available and in good working order. Hoses shall be complete with leak-free disconnect couplings and in good condition.

The recovered refrigerant shall be processed according to local legislation in the correct recovery cylinder, and the relevant waste transfer note arranged. Do not mix refrigerants in recovery units and especially not in cylinders.

If compressors or compressor oils are to be removed, ensure that they have been evacuated to an acceptable level to make certain that flammable refrigerant does not remain within the lubricant. The compressor body shall not be heated by an open flame or other ignition sources to accelerate this process. Draining of oil from a system shall be carried out safely.

Intended Use

There is a risk of injury or death to the user or others, or of damage to the product and other property in the event of improper or unintended use.

The product is the outdoor unit of an air-to-water heat pump with monobloc design.

The product uses the outdoor air as a heat source and can be used to heat a residential building and generate domestic hot water.

The air that escapes from the product must be able to flow out freely, and must not be used for any other purposes.

The product is only intended for outdoor installation.

The product is intended exclusively for domestic use, which means that the following places are not appropriate for installation:

- Where there is mist of mineral oil or oil spray or vapors. Plastic parts may deteriorate, and cause joints to loosen and leakage of water.
- Where corrosive gases (such as sulfurous acid gas) are produced, or corrosion of copper pipes or soldered parts may cause leakage of refrigerant.
- Where there is machinery which emits massive electromagnetic waves. Enormous electromagnetic waves can disturb the control of the system and cause equipment malfunction.
- Where flammable gases may leak, carbon fiber or ignitable dust is suspended in the air or volatile flammables such as paint thinner or gasoline are handled. These types of gases might cause a fire.
- Where the air contains high levels of salt such as a location near the ocean and without structures obstructed by sea winds.
- Where voltage fluctuates a lot, such as a location in a factory.
- In vehicles or vessels.
- Where acidic or alkaline vapors are present.

Intended use includes the following:

- Observance of the operating instructions included for the product and any other installation components.
- Compliance with all inspection and maintenance conditions listed in the instructions.
- Installing and setting up the product in accordance with the product and system approval.
- Installation, commissioning, inspection, maintenance and troubleshooting by qualified contractors and authorized installers.

Intended use also covers installation in accordance with the IP code.

This appliance can be used by children aged from 8 years and above and persons with reduced physical, sensory or mental capabilities or lack of experience and knowledge provided that they have been given supervision or instruction concerning the use of the appliance in a safe way and understand the hazards involved. Children should not play with the appliance. Cleaning and maintenance should not be made by children without supervision.

Any other use that is not specified in these instructions, or use beyond that specified in this document, should be considered as improper use. Any direct commercial or industrial use is also deemed to be improper.

⚠ CAUTION

Improper use of any kind is prohibited.

- Do not rinse the unit.
- Do not place any object or equipment on top of the unit (top plate).
- Do not climb, sit or stand on top of the unit.

Regulations To Be Observed

1) National installation regulations.
2) Statutory regulations for the prevention of accidents.
3) Statutory regulations for environmental protection.
4) Statutory requirements for pressure equipment: Pressure Equipment Directive 2014/68/EU.
5) Codes of practice of the relevant trade associations.
6) Relevant country-specific safety regulations.

7) Applicable regulations and guidelines for operation, service, maintenance, repair and safety of cooling, air conditioning and heat pump systems containing flammable and explosive refrigerant.

Safety Instructions For Working On The System

The outdoor unit contains flammable refrigerant R290 (propane C3H8). In case of a leak, the escaping refrigerant may form a flammable or explosive atmosphere in the ambient air. A safety zone is defined in the immediate vicinity of the outdoor unit, in which special rules apply when work is performed on the appliance. See section "Safety Zone".

Working In The Safety Zone

⚠ CAUTION

Risk of explosion: Refrigerant leak may form a flammable or explosive atmosphere in the ambient air.
Take the following measures to prevent fire and explosion in the safety zone:

- Keep ignition sources away, including naked flames, plug sockets, hot surfaces, light switches, lamps, electrical devices not free of ignition sources, mobile devices with integrated batteries (such as mobile phones and fitness watches).
- Do not use any sprays or other combustible gases in the safety zone.

⚠ CAUTION

Permissible tools: All tools for working in the safety zone must be designed and explosion-protected in accordance with the applicable standards and regulations for refrigerant in safety group A3, such as brushless machines (cordless disposal containers, installation aids, and screwdrivers), extraction equipment, vacuum pumps, conductive hoses, and mechanical tools of non-sparking material.

⚠ CAUTION

The tools must also be suitable for the pressure ranges in use. Tools must be in perfect maintenance conditions.

- The electrical equipment must meet the requirements for areas at risk of explosion, zone 2.
- Do not use flammable materials such as sprays or other flammable gases.
- Before starting work, discharge static electricity by touching earthed objects, such as heating or water pipes.
- Do not remove, block or bridge safety equipment.
- Do not make any changes: Do not modify the outdoor unit, inlet/ outlet lines, electrical connections/ cables or the surroundings.
- Do not remove any components or seals.

Working On The System

Switch off the power supply for the unit (including all affiliated parts) at a separate fuse or mains isolator. Check and ensure that the system is no longer live.

⚠ CAUTION

In addition to the control circuit there may be several power circuits.

⚠ DANGER

Contact with live components can result in severe injuries. Some components on PCBs remain live even after the power supply has been switched off. Prior to removing covers from the appliances, wait at least 4 minutes until the voltage has completely dropped out.

- Safeguard the system against re-connection.
- Wear suitable personal protective equipment when carrying out any work.
- Do not touch any switch or electrical parts with wet fingers. It may cause electrical shock and compromise the system.

DANGER

Hotsurfaces and fluids can result in burns or scalding. Cold surfaces may cause frostbite.

- Prior to servicing or maintenance tasks, switch off and allow the equipment to cool down or warm up.
- Do not touch hot or cold surfaces on the appliance, fittings or pipework.

NOTE

Electronic assemblies can be damaged by electrostatic discharge. Before beginning work, touch earthed objects, such as heating or water pipes, to discharge any static.

Safety work area and temporary flammability zones.

CAUTION

When working on systems using flammable refrigerants, the technician should consider certain locations as “temporary flammable zones”. These are normally regions where at least some emission of refrigerant is anticipated to occur during the normal working procedures, such as recovery, charging and evacuation, typically where hoses may be connected or disconnected. The technician should ensure three meters safety working area (radius of the unit) in case of any accidental release of refrigerant that forms a flammable mixture with air.

Working On The Refrigerant Circuit

R290 refrigerant (propane) is an air displacing, colorless, flammable, odorless gas which forms explosive mixtures with air.
Refrigerant drained must be properly disposed of by authorized contractors.

- Perform the following measures before beginning work on the refrigerant circuit:
  Check the refrigerant circuit for leaks.
- Ensure very good ventilation especially in the floor area and maintain this for the duration of the work.
- Secure the area surrounding the work area.
- Inform the following persons of the type of work to be carried out:
  – All maintenance personnel.
  – All persons in the vicinity of the system.
- Inspect the area immediately around the heat pump for flammable materials and ignition sources: Remove all flammable materials and ignition sources.
- Before, during and after the work, check the surrounding area for escaping refrigerant using an explosion-proof refrigerant detector suitable for R290. This refrigerant detector must not generate any sparks and must be suitably sealed.
- A CO2 or powder extinguisher must be available in the following cases:
  – Refrigerant is being drained.
  – Refrigerant is being topped up.
  – Soldering or welding work is in progress.
- Display signs prohibiting smoking.

DANGER

Escaping refrigerant can lead to fires and explosions that result in very serious injuries or death.

- Do not drill or apply heat to a refrigerant circuit filled with refrigerant.
- Do not operate schrader valves unless a fill valve or extraction equipment is attached.
- Take measures to prevent electrostatic charge.
- Do not smoke. Avoid naked flames and sparks. Never switch lights or electrical appliances on or off in environments with naked flames or sparks.
- Components that contain or contained refrigerant must be labeled, and stored in well ventilated areas in accordance with the applicable regulations and standards.

DANGER

Direct contact with liquid or gaseous refrigerant can cause serious damage to health such as frostbite and/or burns. There is arisk of asphyxiation if liquid or gaseous refrigerant is breathed in.

- Prevent direct contact with liquid or gaseous refrigerant.
- Wear personal protective equipment when handling liquid or gaseous refrigerant.
- Never breathe in any refrigerant vapor.

DANGER

Refrigerant is under pressure: Mechanical loading of lines and components can cause leaks in the refrigerant circuit. Do not apply loads to the lines or components, such as supporting or placing tools.
Hot or cold metallic surfaces of the refrigerant circuit may cause burns or frostbite in case of skin contact. Wear personal protective equipment to protect against burns or frostbite.

NOTE

Hydraulic components may freeze during refrigerant removal. Drain heating water from the heat pump beforehand.

DANGER

Damage to the refrigerant circuit can cause refrigerant to enter the hydraulic system. After completion of the work, vent the hydraulic system correctly. When doing so, ensure the area is sufficiently ventilated.

Installation

General

- Be sure to use only specified accessories and parts for installation. Failure to use specified parts may result in water leakage, electric shocks, fires, or the unit falling from its mount.
- Install the unit on a foundation that can withstand its weight. Insufficient physical strength may cause the unit to fall and possible injury.
- Perform specified installation work with full consideration of strong wind, hurricanes, or earthquakes. Improper installation may result in accidents due to equipment falling.
- Earth the unit and install a ground fault circuit interrupter in accordance with local regulations. Operating the unit without a proper ground fault circuit interrupter may cause electric shocks and fires.
- Install the power cable at least 3 feet (1 meter) away from televisions or radios to prevent interference or noise. (Depending on the radio waves, a distance of 3 feet (1 meter) may not be sufficient to eliminate the noise.)
- Any damaged power cord must be replaced by the manufacturer or its service agent or a similarly qualified person in order to avoid a hazard.
- This appliance cannot be used at altitudes 2000m and above.

⚠ CAUTION

For the primary water circulation loop:

1) If the air vent valve is installed in the indoor side, no ignition sources exist around the air vent valve.
2) Make sure the outlet of the indoor safety valve leads to the outdoor side and no ignition sources exist around the outlet of safety valve.

For the secondary water circulation loop (e.g. DHW loop):

Follow the general rules for the installation of air vent valve and safety valve.

Two situations should be considered for outdoor installations to prevent damage to the system, releases, and undesirable consequences:

- Where the equipment is located in an area accessible by members of the public.
- Where the equipment is located in a restricted area, with access to authorized persons only.

⚠ DANGER

Open flames, fires, open ignition sources and smoking are prohibited.



⚠ DANGER

Flammable materials are prohibited.



Freezing Protection

⚠ CAUTION

Freezing can cause damage to the heat pump.

- Thermally insulate all the hydraulic lines.
- Antifreeze can be filled in the secondary circuit in accordance with local regulations and standards.

Repair Work

⚠ CAUTION

Repairing components that fulfil a safety function can compromise the safe operation of the system.

- Replace faulty components only with genuine spare parts from the manufacturer.
- Do not undertake any repairs on the inverter. Replace the inverter if there is a defect.
- Repair work should not be performed in the field. Repair the unit in a specified location.

Safety Instructions For Operating The System

What To Do If Refrigerant Leaks

⚠ WARNING

To avoid potential risk from refrigerant leak, always keep 2 meters away from the unit, especially for kids, no matter the unit is in operation or not.

⚠ DANGER

Refrigerant leak can lead to fires and explosions that result in very serious injuries or death. Breathing in refrigerant may cause asphyxiation.

- Ensure very good ventilation especially in the floor area of the outdoor unit.
- Do not smoke. Avoid naked flames and sparks. Never switch lights or electrical appliances on or off in environments with naked flames or sparks.
- Evacuate any people from the dangerous zone.
- From a safe position, switch off the power supply for all system components.
- Remove ignition sources from the dangerous zone.
- The system user should know that no ignition source may be brought into the dangerous zone during the repair.
- Repair work must be carried out by an authorized contractor.
- Do not recommission the system until it is repaired.

⚠ CAUTION

Direct contact with liquid or gaseous refrigerant can cause serious damage to health, e.g. frostbite and/or burns. Breathing in liquid or gaseous refrigerant may cause asphyxiation.

- Prevent direct contact with liquid or gaseous refrigerant.
- Never breathe in refrigerant vapors.

What To Do If Water Leaks

⚠ DANGER

If water leaks from the appliance, an electric shock may occur. Switch off the heating system at the external isolator (e.g. fuse box, domestic distribution board).

⚠ DANGER

If water leaks from the appliance, scalding may occur. Never touch hot water.

What To Do If The Outdoor Unit Ices Up

⚠ CAUTION

A build-up of ice in the condensate pan and in the fan area of the outdoor unit can cause damage to the equipment.

- Do not use mechanical items/aids to remove ice.
- Before using electrical heating appliances, check the refrigerant circuit for leaks with a suitable measuring device. The heating appliance should not be a source of ignition, and must meet the requirements of EN 60335-2-30.
- If ice regularly builds up on the outdoor unit (e.g. in areas where frost and heavy fog occur frequently), install a fan ring heater (accessory) that is suitable for refrigerant R290 and/or an electric ribbon heater in the condensate pan (accessory or factory-fitted device).

Safety Instructions For Storage Of The Outdoor Unit

The outdoor unit is charged at the factory with refrigerant R290 (propane).

⚠ DANGER

Refrigerant leak can lead to fires and explosions that result in very serious injuries or death. Breathing in refrigerant may cause asphyxiation. Store the outdoor unit in the following conditions:

- An explosion prevention plan must be in place for storage.
- Ensure the storage location is well ventilated.
- Keep away from ignition sources (avoid exposure to heat and smoking).
- Temperature range for storage: -25 °C to 60 °C.
- Only store the outdoor unit in its original protective packaging from the factory.
- Protect the outdoor unit against damage.
- The maximum number of outdoor units that may be stored in one place is determined according to local conditions.

⚠ CAUTION

A fire with R290 should only be fought with CO2 or dry powder extinguishers.

⚠ Battery Disposal

Do not dispose of batteries as unsorted municipal waste. Refer to local laws for proper disposal of batteries. Batteries may have a chemical symbol at the bottom of the disposal icon. This chemical symbol means that the battery contains a heavy metal that exceeds a certain concentration. An example is Pb: Lead (> 0.004 %). Appliances and used batteries must be treated in a specialized facility for reuse, recycling and recovery. By ensuring correct disposal, you will help avoid possible negative consequences for the environment and human health.

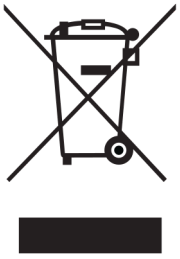



Caution: Risk of fire / flammable materials

2 General Introduction

2.1 Operating Range

LWT – Ambient Temp. (Heating Mode)

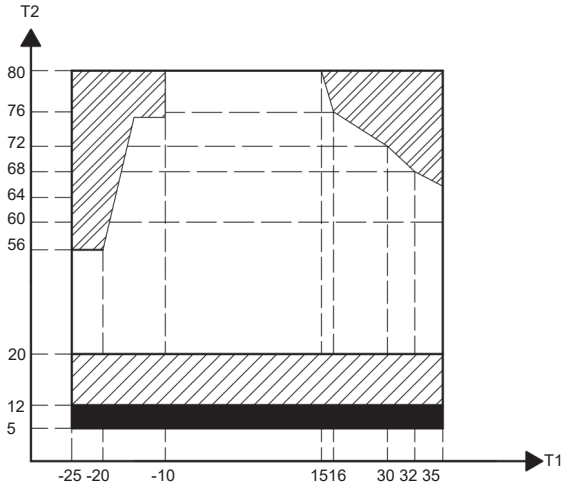

T1:outdoor ambient temperature (°C)
T2:leaving water temperature (°C)

LWT – Ambient Temp. (Cooling Mode)

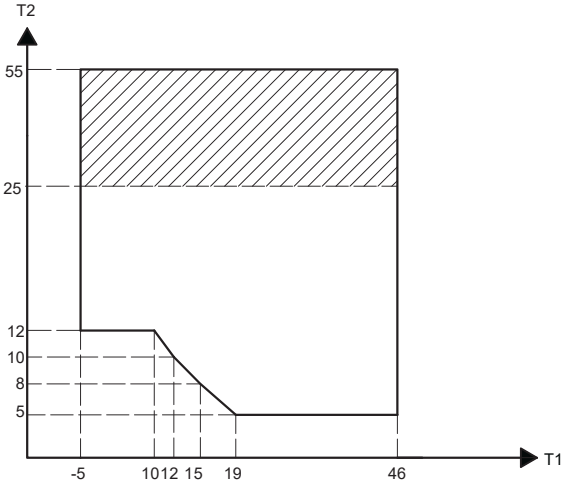

T1:outdoor ambient temperature (°C)
T2:leaving water temperature (°C)

LWT – Ambient Temp. (DHW Mode)

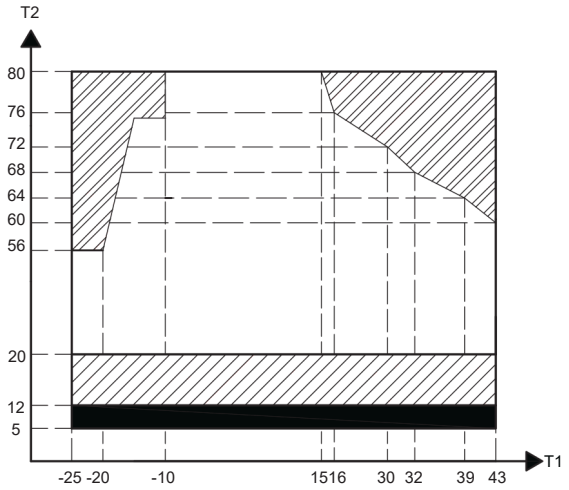

T1:outdoor ambient temperature (°C)
T2:leaving water temperature (°C)

DHW Tank – Ambient Temp. (DHW Mode)

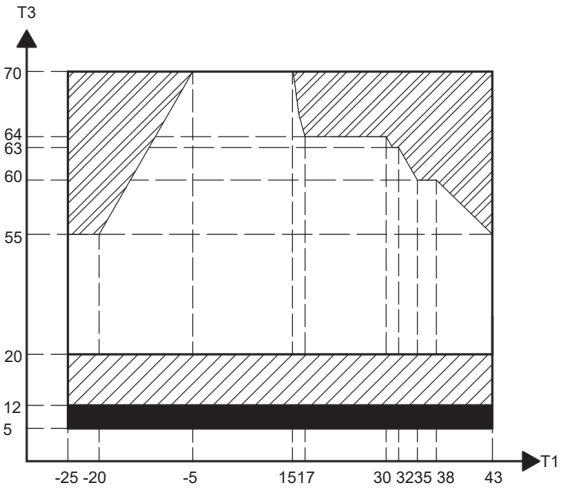

T1:outdoor ambient temperature (°C)
T3:DHW tank temperature (°C)

Limitation and protection may occur during heat pump operation. If IBH/TBH/AHS setting is not activated, only heat pump turns on.

Heat pump operating range with possible limitation and protection.

Heat pump turns off, only IBH/TBH/AHS on.

2.2 Hydraulic Module

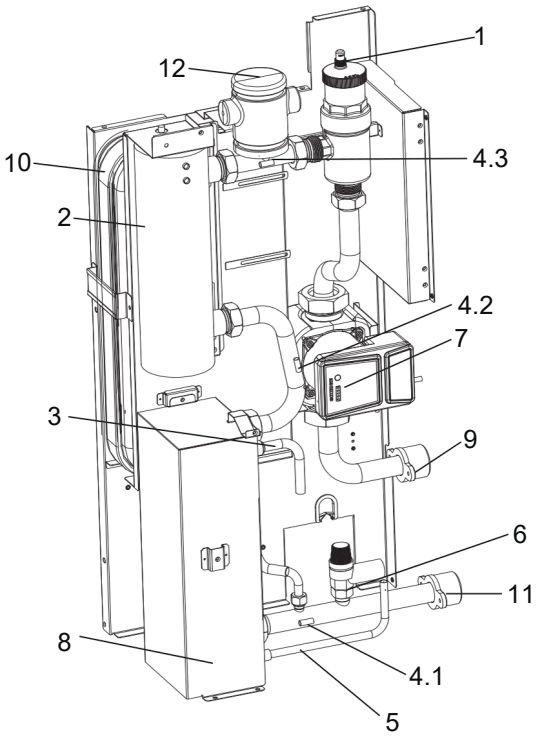

4-6 kW Unit with a backup heater

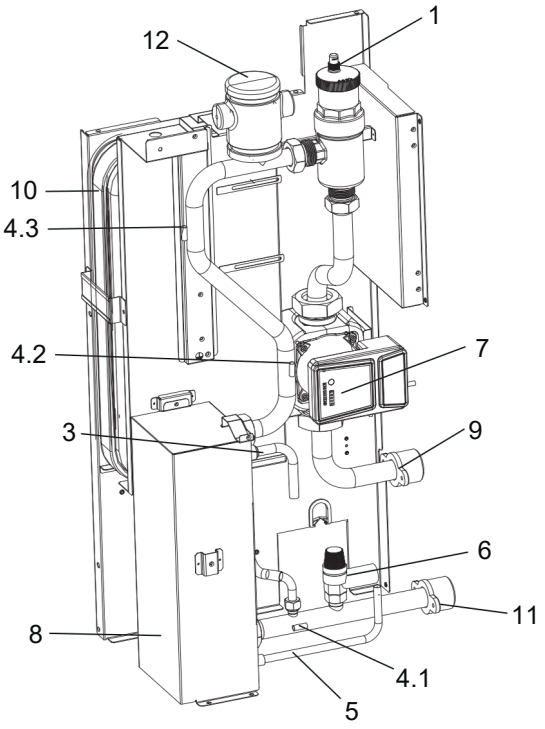

4-6 kW Unit without a backup heater

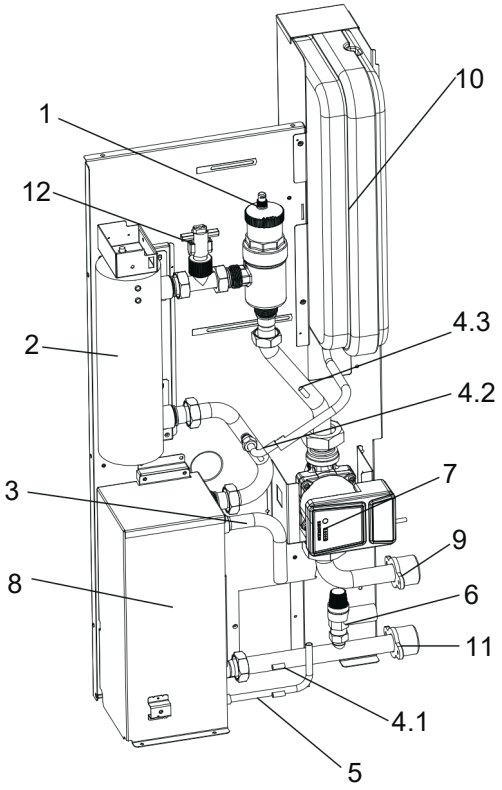

8-16 kW Unit with a backup heater

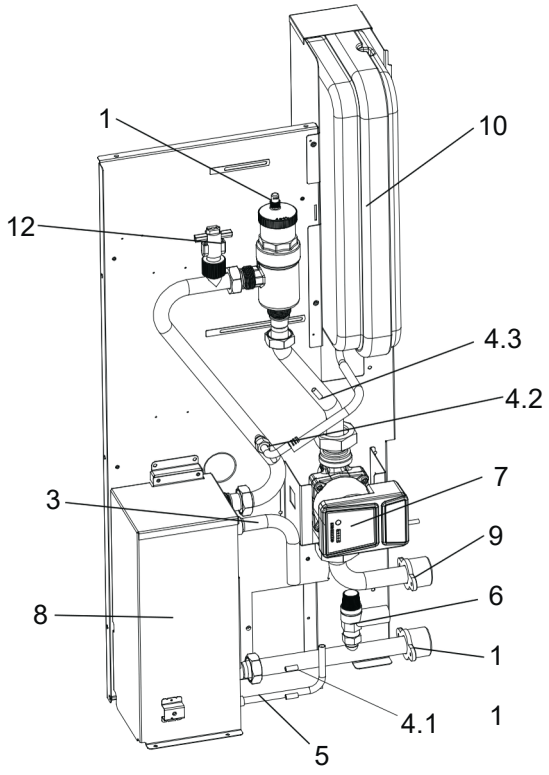

8-16 kW Unit without a backup heater

Code	Name	Explanation
1	Gas separator	Automatically removes the remaining air from the water circuit and prevents R290 from reaching the indoor unit.
2	Backup heater	Provides additional heating capacities when the heating capacity of the heat pump is insufficient due to low outdoor temperature, protects the external water pipes from freezing, and serves as a backup heat source in case of heat pump failure.
3	Refrigerant gas pipe	/
4	Temperature sensor	Three temperature sensors determine the water and refrigerant temperature at various points in the water loop: TW_IWT, TW_OWT and TW_TOWT.
5	Refrigerant liquid pipe	/
6	Safety valve	Prevents excessive water pressure by opening when the pressure reaches 0.3 MPa (3 bar) and discharging water from the water loop.
7	Pump	Circulates water in the water loop.
8	Plate heat exchanger	Transfers heat between the refrigerant and the water.
9	Water outlet pipe	/
10	Expansion tank	By absorbing and releasing moisture to regulate the pressure within the system, safety risks caused by excessive pressure can be prevented.
11	Water inlet pipe	/
12	Water flow switch	Water loop protection switch. The switch will trigger in the event of insufficient water flow.

3 Important Information For The Refrigerant

Refrigerant type: R290;

Volume of GWP: 3.

GWP = Global Warming Potential.

Model	Factory Charged Refrigerant Volume In The Unit	
	Refrigerant/kg	Tonnes CO_2 Equivalent
4 kW	0.80	0.002
6 kW	0.80	0.002
8 kW	1.20	0.004
10 kW	1.20	0.004
12 kW	1.35	0.004
14 kW	1.35	0.004
16 kW	1.35	0.004

4 Unit Installation

⚠WARNING

- The unit must be installed outdoors, not indoors, so small animals can make contact with electrical parts, which may cause malfunction, smoke or fire. Be sure to adopt adequate measures to prevent the unit from being used as a shelter by small animals.
- There is flammable refrigerant in the unit and be sure that sufficient precautions are taken in case of refrigerant leakage according to relevant local laws and regulations.

Select an installation site where the following conditions are satisfied and one that meets with your customer's approval.

- Places that are well-ventilated.
- Places where the unit does not disturb next-door neighbors.
- Safe places which can bear the unit's weight and vibration and where the unit can be installed at an even level.
- Places where there is no possibility of flammable gas or product leak.
- Places without potential explosion risk.
- Places where servicing space can be well ensured.
- Places where the units' piping and wiring lengths come within the allowable ranges.
- Places where water leaking from the unit cannot cause damage to the location (e.g. in case of a blocked draining pipe).
- Places where rain can be avoided as much as possible.
- Do not install the unit in places often used as a work space. In case of construction work (e.g. grinding etc.) where a lot of dust is created, the unit must be covered.
- When installing the unit in a place exposed to strong wind, pay special attention to avoiding strong winds of 5 m/s or more continuously blowing the front air outlet of the unit. Please install the suction side of the unit facing the wall or baffle plate. Otherwise the following consequences may occur:
  - A short circuit.
  - Deterioration of the operational capacity.
  - Frequent frost acceleration in heating operation.
  - Disruption of operation due to rise of high pressure.
  - Motor burn out.
  - The fan can rotate very fast until it breaks.

4.1 Before Installation

- **Before Installation**

  Be sure to confirm the model name and the serial number of the unit.

- **Handling**

  Due to relatively large dimensions and heavy weight, the unit should only be handled using lifting tools with slings. The slings can be fitted into foreseen sleeves at the base frame that are made specifically for this purpose.

⚠ C A U T I O N

- To avoid injury, do not touch the air inlet or aluminum fins of the unit.
- Do not use the grips in the fan grills to avoid damage.
- The unit is top heavy! Prevent the unit from falling due to improper inclination during handling.
- For models with grilles, it is necessary to remove the grilles before lifting them.
- During lifting, the outer packaging should be retained to prevent damage to components such as grilles.

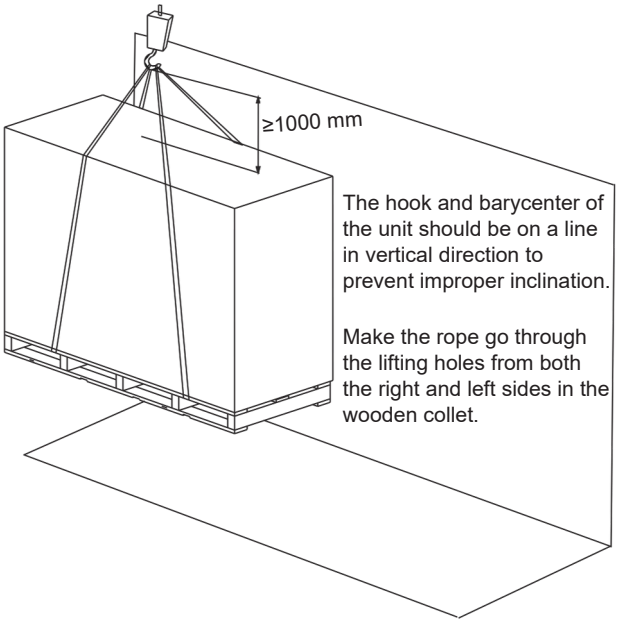

The position of barycenter for different units can be seen in the picture below.

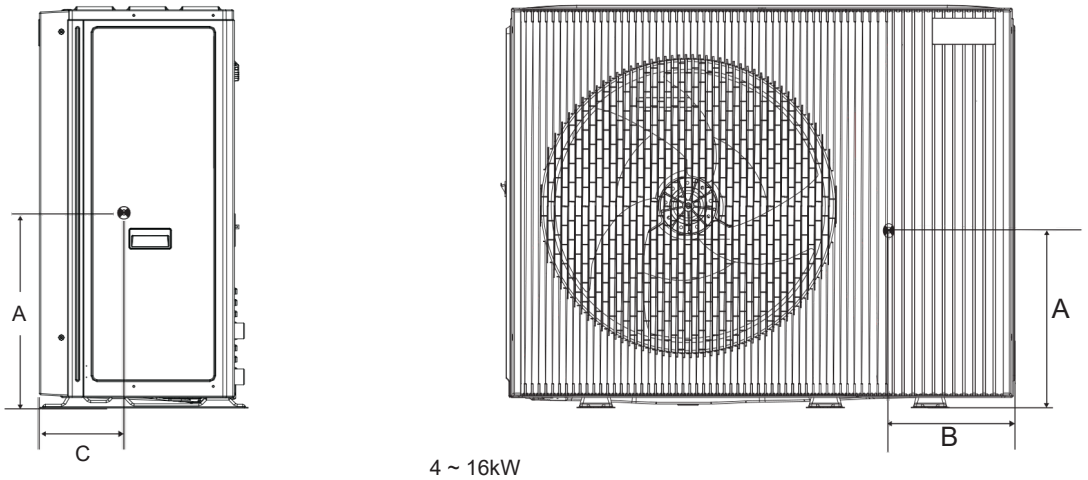

4 ~ 16kW

(Unit: mm)

Model	A	B	C
4 ~ 6kW	290	515	230
8 ~ 16kW	360	410	350

4.2 Unpacking

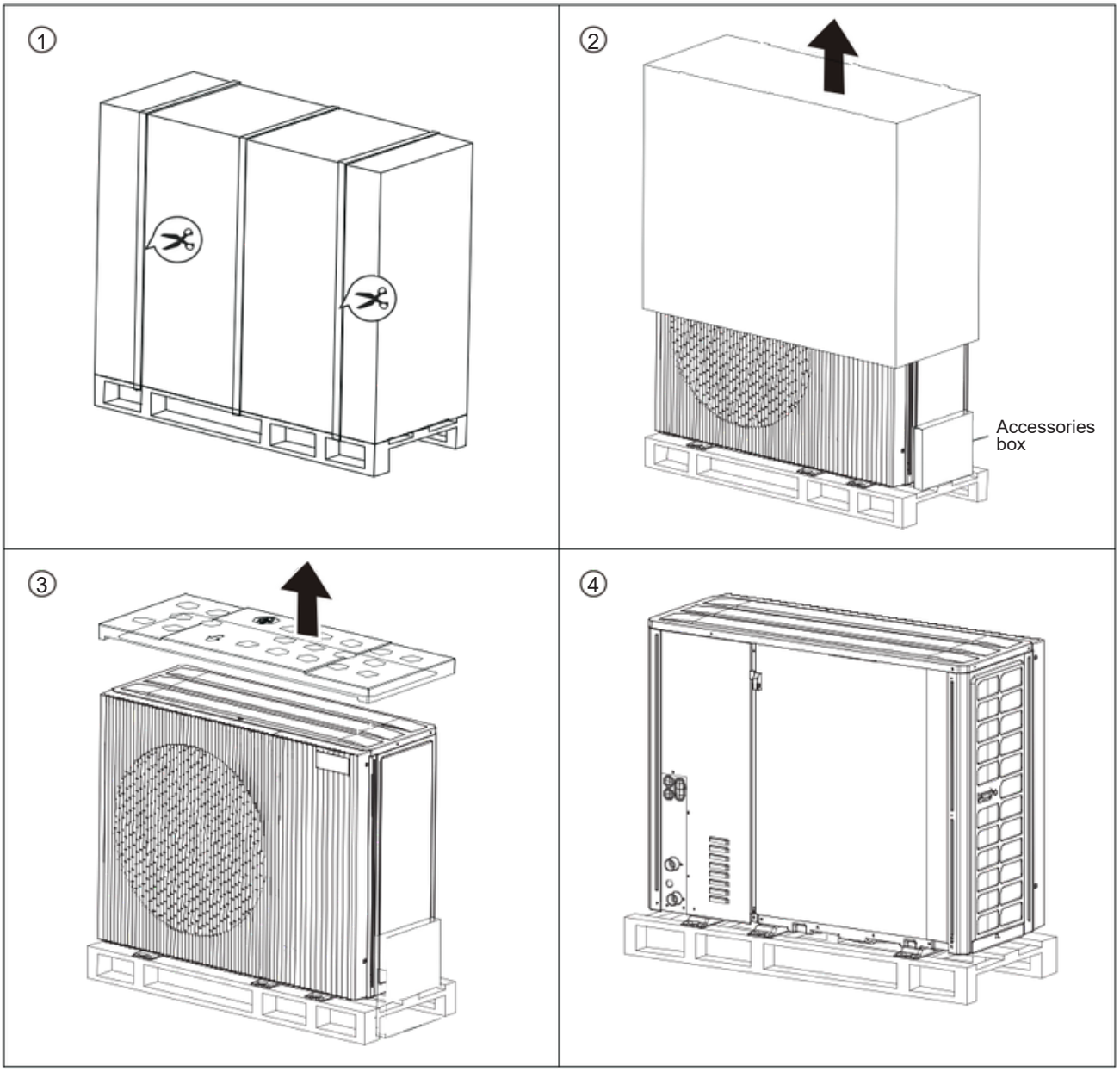

4.3 Accessories Of The Unit

Accessories Of The Unit							
Name	**Illustration**	**Quality**	**Specification**	**Name**	**Illustration**	**Quality**	**Specification**
Installation and Owner's Manual (This manual)		1	-	Wired Co ntroller		1	-
Technical Data Manual		1	-	Connecting Wire for Wired Controller		1	5 m
Operation Manual		1	-	Drainage Joint	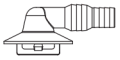	1	φ19 (For hose sizing)
Y-Type S trainer		1	G1"	Thermistor *		1	10 m
Tie Wrap		1	-	Connecting Wire for Thermistor		3	2/4/6 port (One for each type)
Hose Clamp		1	φ13 ~ 19 ±3				

The thermistor features a universal design that can be flexibly configured according to system requirements and is compatible with any of the following functions.

Name	Explanation	Name	Explanation
Tr 1	Zone 1 room temperature sensor	Tbt 1	Balance tank upper water temperature sensor
Tr 2	Zone 2 room temperature sensor	Tbt 2	Balance tank lower water temperature sensor
Tr 3	Zone 3 room temperature sensor	Tw_1	Zone 1 inlet water temperature sensor
Thwt	Water tank temperature sensor	Tw_2	Zone 2 inlet water temperature sensor
Tsolar	Solar energy panel temperature sensor	Tw_3	Zone 3 inlet water temperature sensor
Ttots	The final outlet water temperature sensor of the system		

4.4 Installation Site

Innormalcondition,refertothe figures below for installation of the unit:

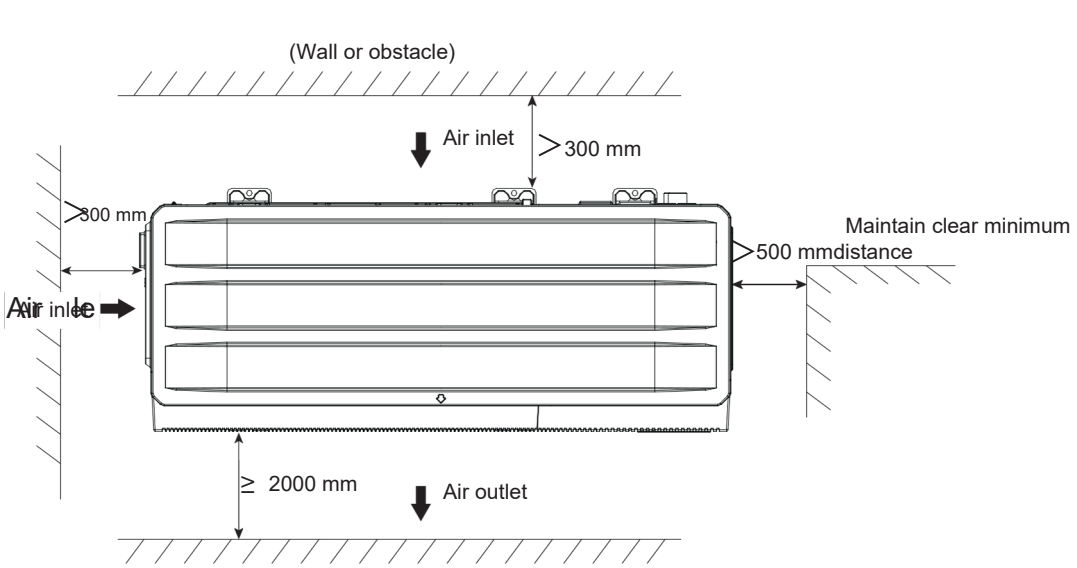

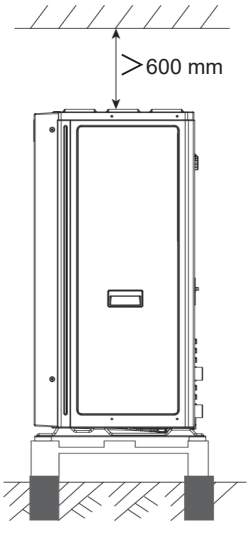

NOTE

- Make sure there is enough space to do the installation. Set the outlet side at a right angle to the direction of the wind. Prepare a water drainage channel around the foundation, to drain waste water from around the unit.
- If water does not easily drain from the unit, mount the unit on a foundation of concrete blocks, etc. the height of the foundation should be about 100 mm.
- When installing the unit in a place frequently exposed to snow, pay special attention to elevate the foundation as high as possible.
- If you install the unit on a building frame, please install a waterproof plate (field supply) (about 100 mm, on the underside of the unit) in order to avoid drain water dripping. (See the picture on the right.)



4.4.1 Selecting A Location In Cold Climates

When operating the unit in a low outdoor ambient temperature, be sure to follow the instructions described below.

In areas with heavy snowfall, piled snow may block the air intake. Make sure that the installation position of the unit is at least 150 mm above the estimated level of snow. A frame can be used to increase the installation height to avoid adverse effects of snow on the unit.

- · Install a snow-proof hood to avoid snow from piling on the outdoor unit. If lateral snowfall is possible, make sure that the heat exchanger coil is not affected by the snow. (If necessary construct a lateral canopy.)
- Make sure that the product is located at least 150 mm above the maximum expected level of snow.
- If ice accumulates on the base, it may cause critical damage to the unit. (e.g., a lakeside in a cold area, the seashore, an alpine region, etc.)
- In areas with heavy snowfall, do not install the drain plug and drain cap in the outdoor unit because it may cause frozen ground. Therefore, take appropriate measures to prevent it.

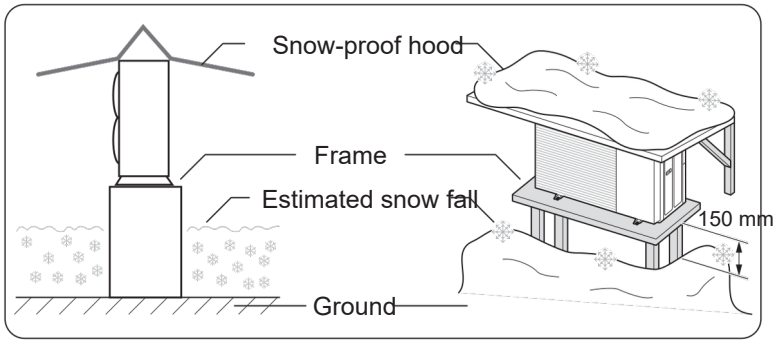

4.4.2 Prevent Sunshine

As the outdoor temperature is measured via the monobloc air thermistor, make sure to install the monobloc in the shade or a canopy should be constructed to avoid direct sunlight, so that it is not influenced by the sun's heat, otherwise protection may be possible to the unit.

WARNING

Uncovered scene, anti-snow shed must be installed:

(1) To prevent rain and snow from hitting the heat exchanger, resulting in poor heating capacity of the unit, after long time accumulation, the heat exchanger freezes;

(2) To prevent the monobloc air thermistor from being exposed to the sun, resulting in failure to start up;

(3) To prevent freezing rain.

4.4.3 Protective Zone

The product contains R290 refrigerant. Note that this refrigerant has a higher density than air. In the event of a leak, escaping refrigerant may collect near the ground.

The refrigerant must not collect in any way that may lead to a dangerous, explosive, suffocating or toxic atmosphere. The refrigerant must not get inside the building via building openings. The refrigerant must not collect in grooves.

A protective zone is defined around the product. There must be no windows, doors, light shafts, cellar entrances, escape hatches, flat roof windows or ventilation openings in the protective zone.

There must be no ignition sources, such as plug sockets, light switches, lamps, electrical switches or other permanent ignitions sources, in the protective zone.

The protective zone must not extend to adjacent buildings or public traffic areas.

In the protective zone, you are not permitted to make any subsequent structural alterations which infringe the stated rules for the protective zone.

4.4.3.1 Protective Zone For Ground And Flat-roof Installation

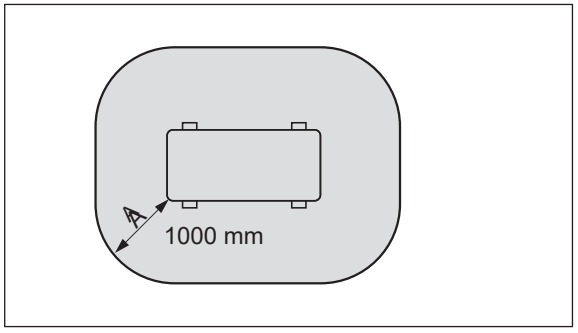

Dimension A is a clearance around the product.

4.4.3.2 Protective Zone For Ground Installation In Front Of A Building Wall

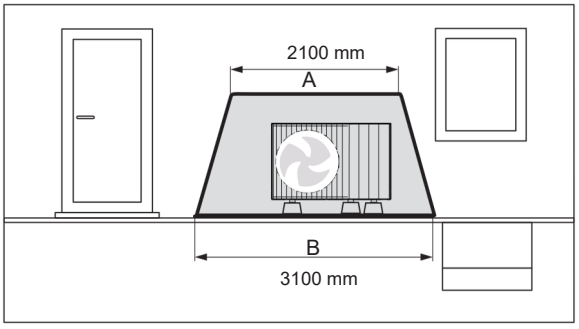

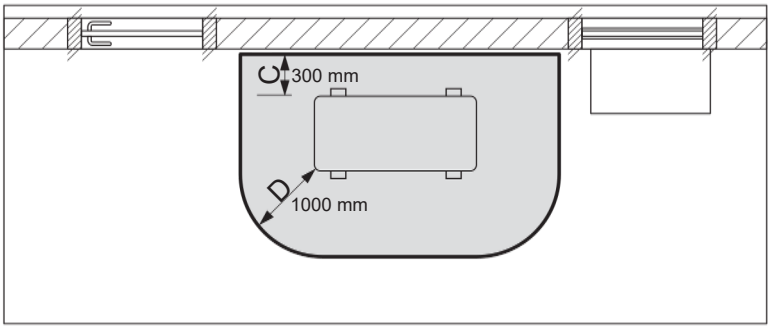

Dimension C is the minimum clearance that must be maintained to the wall.

4.4.3.3 Protective Zone For Ground Installation In A Building Corner

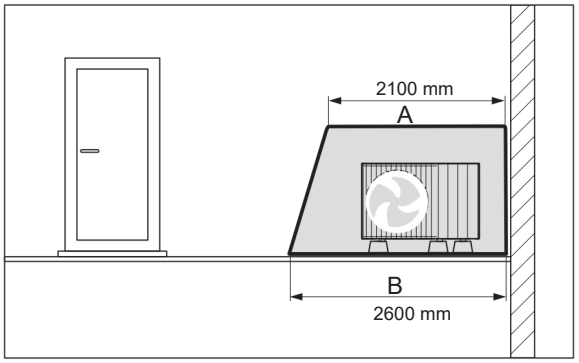

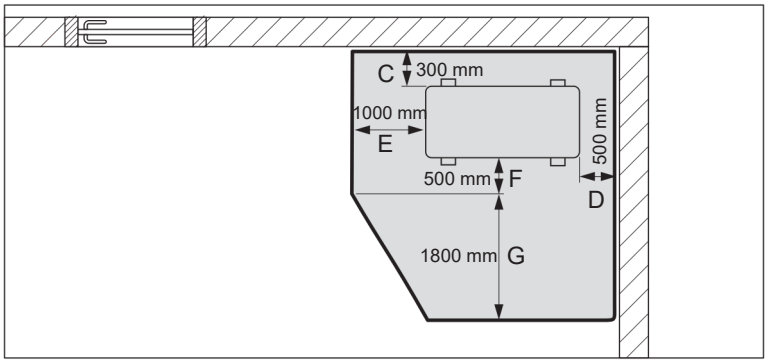

The right-hand corner of the building is shown here. Dimensions C and D are the minimum clearances that must be maintained to the wall. Dimension D varies for the left-hand corner of the building.

4.4.3.4 Protective Zone For Wall Installation In Front Of A Building Wall

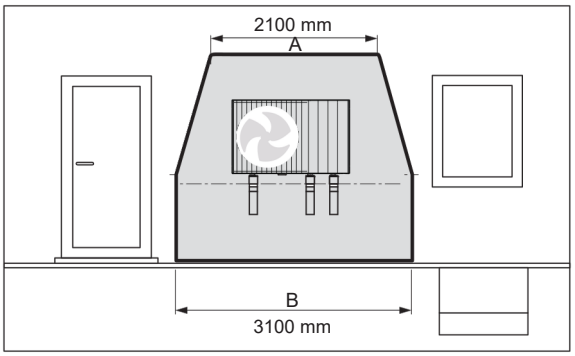

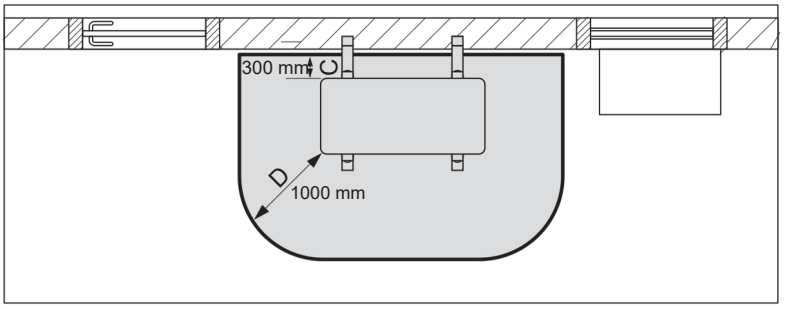

The protective zone below the product extends as far as the floor.

4.4.3.5 Protective Zone For Wall Installation In A Building Corner

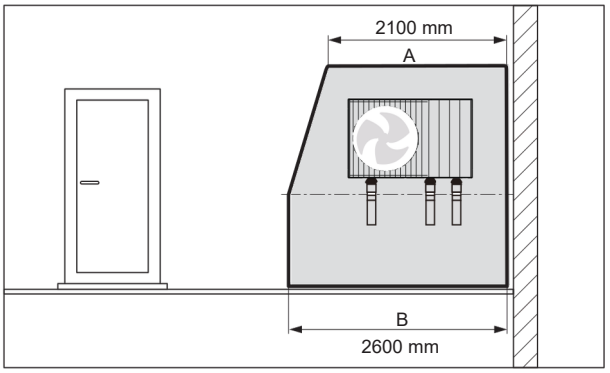

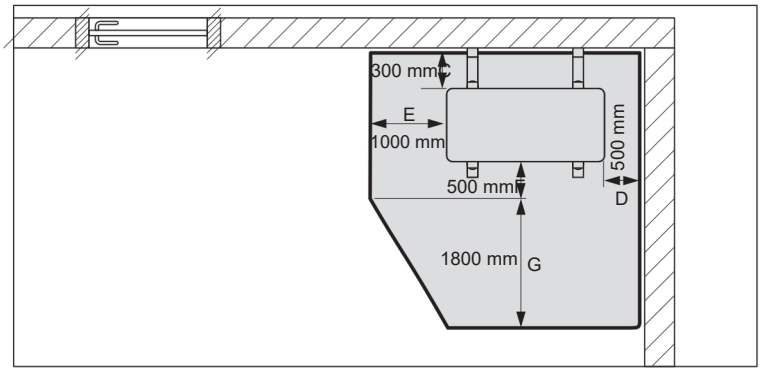

The protective zone below the product extends as far as the floor. Dimension C is the minimum clearance that must be main-tained to the wall.

4.4.4 Installation Guide At The Seashore

Make sure to follow the below guides when installing at the seashore.

1. Do not install the product in a place where it is directly exposed to sea water and sea breeze.

• Make sure to install the product behind a structure (such as a building) that can block sea breeze.

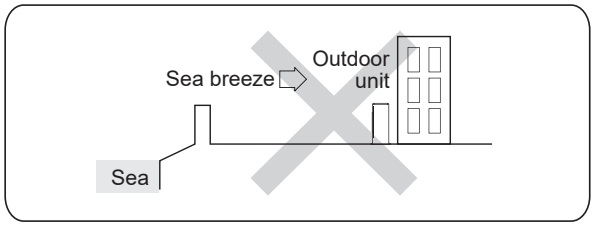

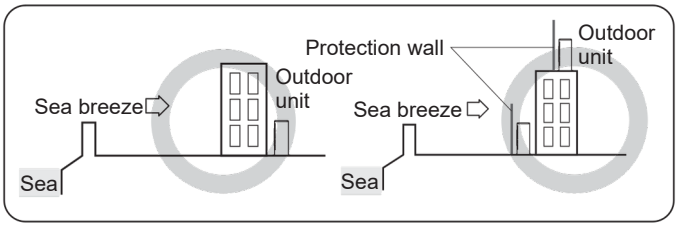

• A protection wall should be constructed with a solid material that can block the sea breeze and the height and width of the wall should be 1.5 times larger than the size of the outdoor unit. (Please secure more than 2000 mm of space between the protection wall and the outdoor unit for air circulation.)

2. Consider that the salt particles clinging to the external panels should be sufficiently washed off.

• When a product is installed at the seashore, periodically clean it with fresh water to remove attached salt deposits.

3. Make sure that the base of the unit is installed at water level and therefore has optimum drainage. Because trapped water at the bottom of the outdoor unit significantly promotes corrosion.

• Prevent blockage of the drain hole by foreign substances, by cleaning adequately.

• Make sure to clean the base plate adequately and regularly as dirt, sand and other substances stay moist and promote corrosion.

4.5 Installation Precautions

4.5.1 Dimensions

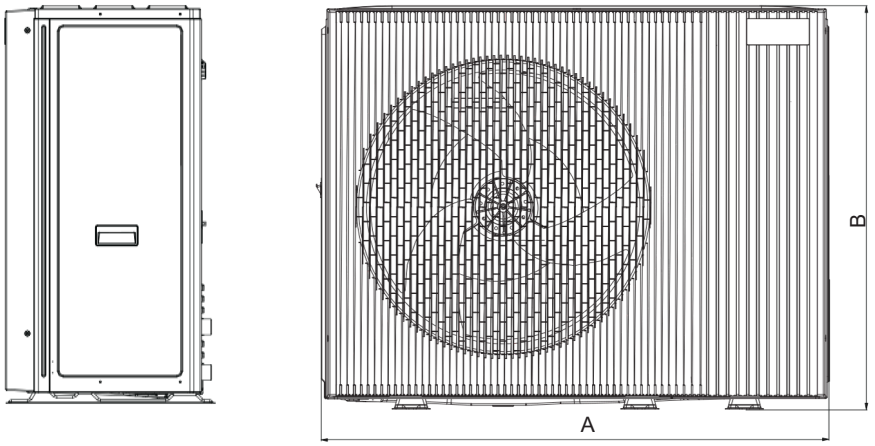

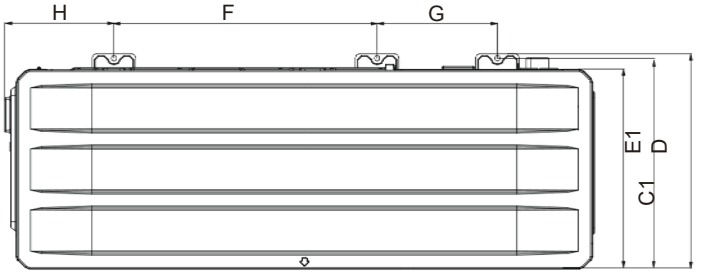

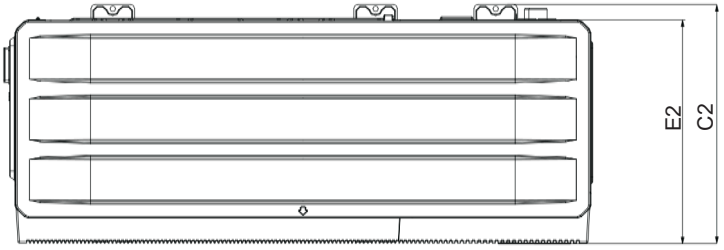

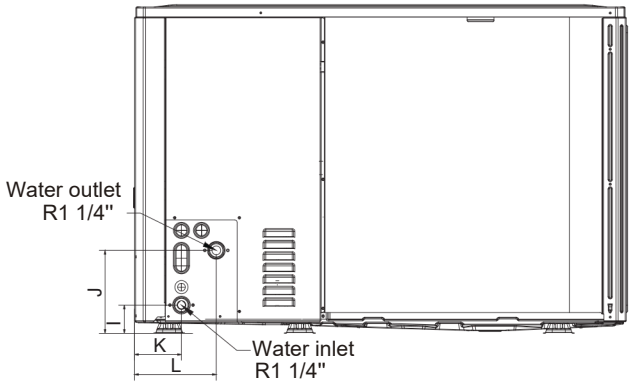

4 ~ 6 kW

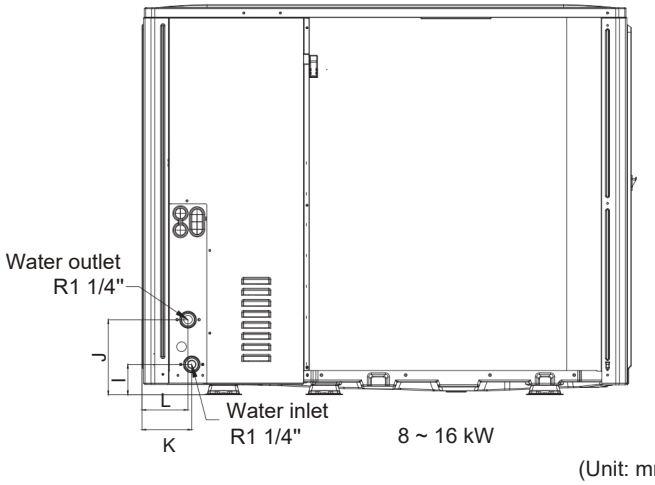

8 ~ 16 kW

(Unit: mm)

Model / Size	A	B	C1	D	E1	F	G	C2	E2	H	I	J	K	L
4 ~ 6 kW	1293	860	495	462	432	675	341	523	489	180	74	216	122	213
8 ~ 16 kW	1336	1061	501	491	465	602	275	552	516	236	82	204	135	125

4.5.2 Installation Requirements

- Checkthestrength and levelofthe installation ground so that the unit may not cause any vibrations or noise during the operation.
- In accordance with the foundation drawing in the figure, fix the unit securely by foundation bolts. Screw in the foundation bolts until their length is 20 mm from the foundation surface. (Prepare six sets each of Φ10 expansion bolts, nuts and washers which are readily available in the market.)
- A rubber shock pad must be used to reduce the operating noise of the unit.

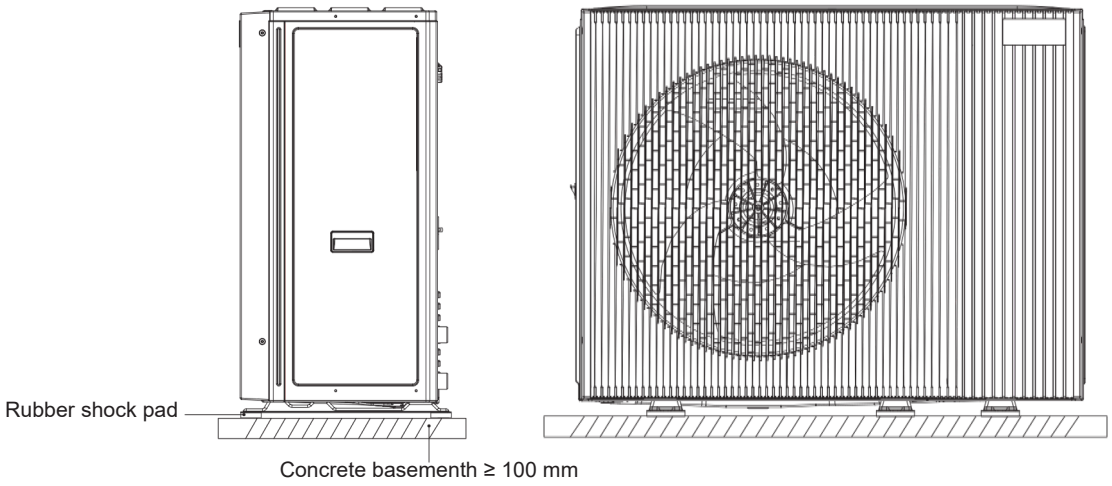

4.5.3 Drainage Kit Installation

ODU Drainage Kit Installation

- Fasten the drain kit (accessory) to the hole on the bottom tray as shown in the picture. If a drain pipe is required, connect the drain pipe to the drain kit as shown in the picture, and guide the condensed water and defrosting water to a suitable place.

NOTE

- If necessary, please contact the after-sales service to purchase the ODU drain pipe.
- Heat & Cool unit need to drain the condensed water from ODU. Only cooling units don't need to.
- In wet and cold areas in winter, the drained water is easy to freeze, which may damage the fan. Therefore, it is recommended not to install a drain kit, otherwise it is not good for drainage and protection of the machine.
- For all installation types, ensure that any condensate that accumulates is discharged into a frost-free area.
- To prevent the condensate from freezing, self-regulating heating cable (field supplied) can be threaded into the downpipe so that the condensate can discharge via the downpipe.

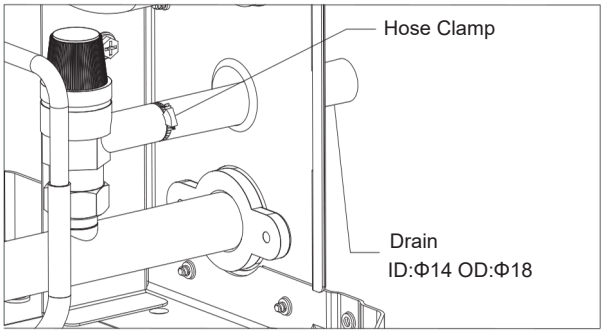

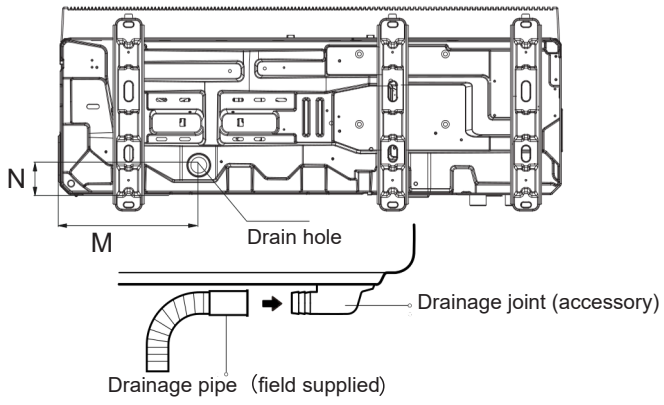

(Unit: mm)

Size \ Model	4 ~ 6 kW	8 ~ 16 kW
M	355	470
N	75	83

Installation On A Soft Ground

- For installation on a ground, the condensate must be discharged via a downpipe into a gravel bed that is located in a frost-free area.
- The downpipe must go into a sufficiently large gravel bed so that the condensate can trickle away freely.

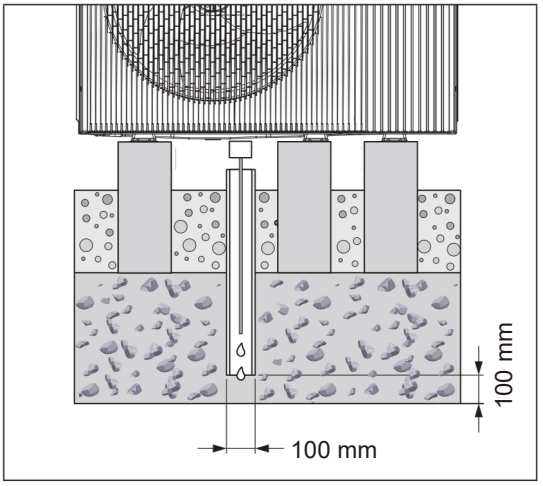

Installation On A Solid Ground

Guide the condensation pipe to a sewer, pump sump or soak away.

⚠ CAUTION

It's necessary to install an electrical heating belt if water can't drain out in cold weather even if the big drain hole is open.
It is suggested to site the unit with the base electric heater.

4.5.4 Air Outlet Grille Installation And Removal

- During the ODU lifting and maintenance process, it is necessary to disassemble and assemble the grille.
- As shown in the figure, clip the 6 buckles of the grille into the holes on the sheet metal, press down on the grille, and fix the 4 screws to complete the installation.
- Remove 4 screws, lift the grille upwards, and pull the grille outward to complete the disassembly.

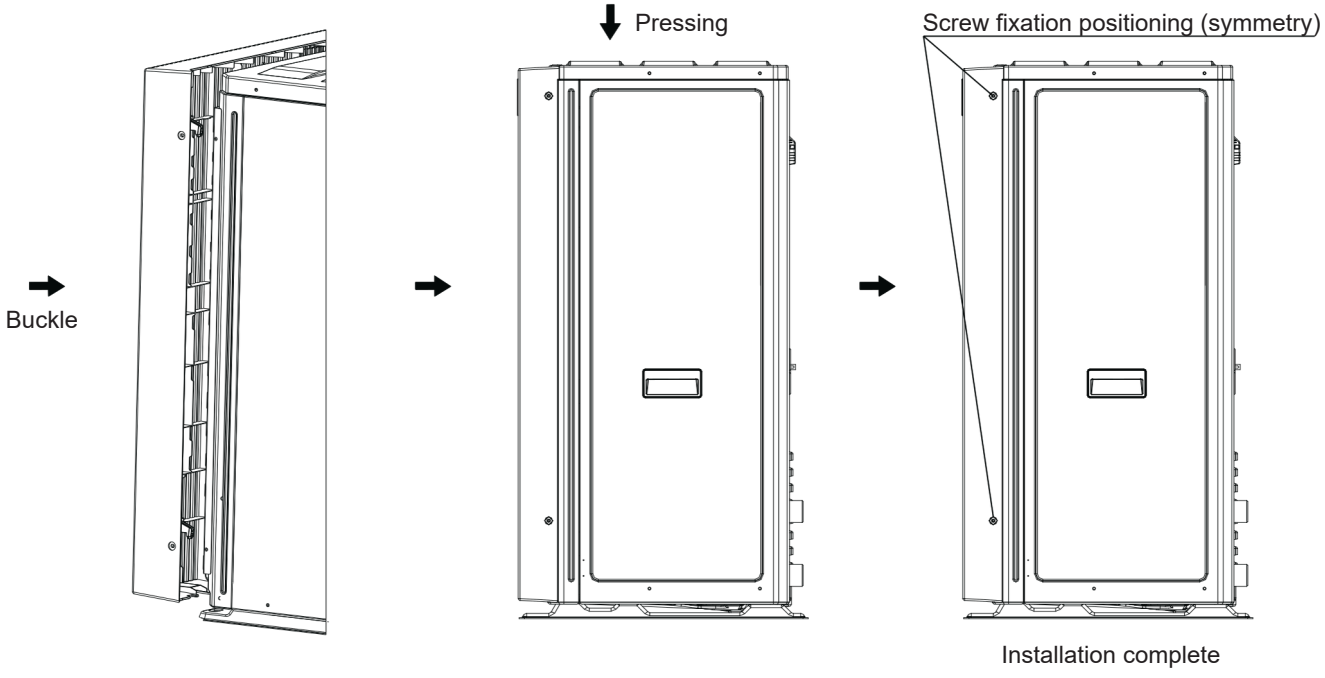

4.6 Servicing Space Requirements

4.6.1 In Case Of Stacked Installation

1. In case obstacles exist in front of the outlet side.

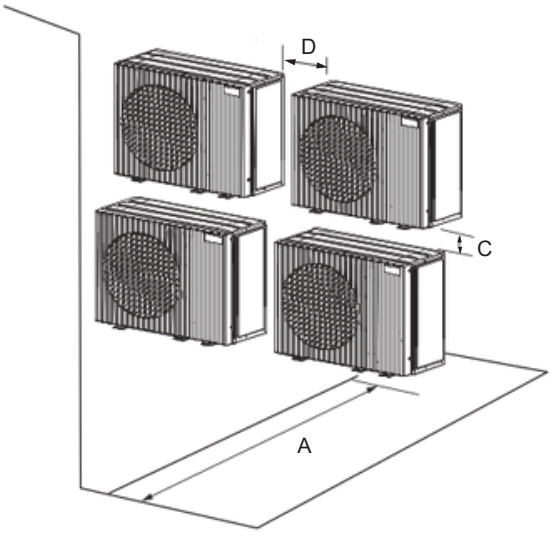

2. In case obstacles exist in front of the air inlet.

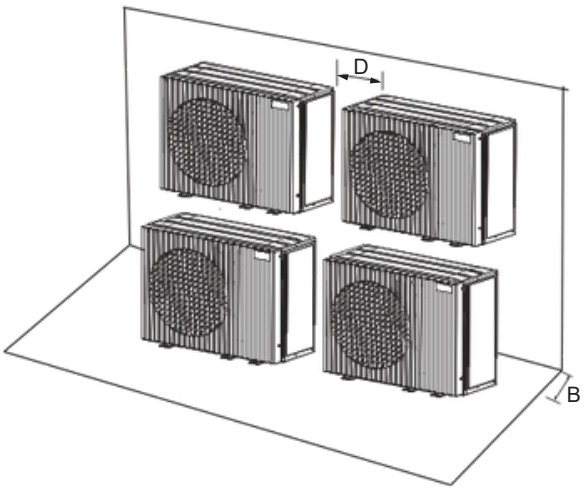

(Unit: mm)

Model	A	B	C	D
4 ~ 16 kW	≥ 2000	≥ 300	≥ 200	≥ 500

NOTE

Whentheunits are stacked for installation, the chassis drainage connection must be properly made, otherwise in cold weather, the drainage of the upper unit may cause the fins of the lower unit to hang ice.

4.6.2 In Case Of Multiple-row Installation (For Roof Top Use, Etc.)

In case of installing multiple units in lateral connection per row.

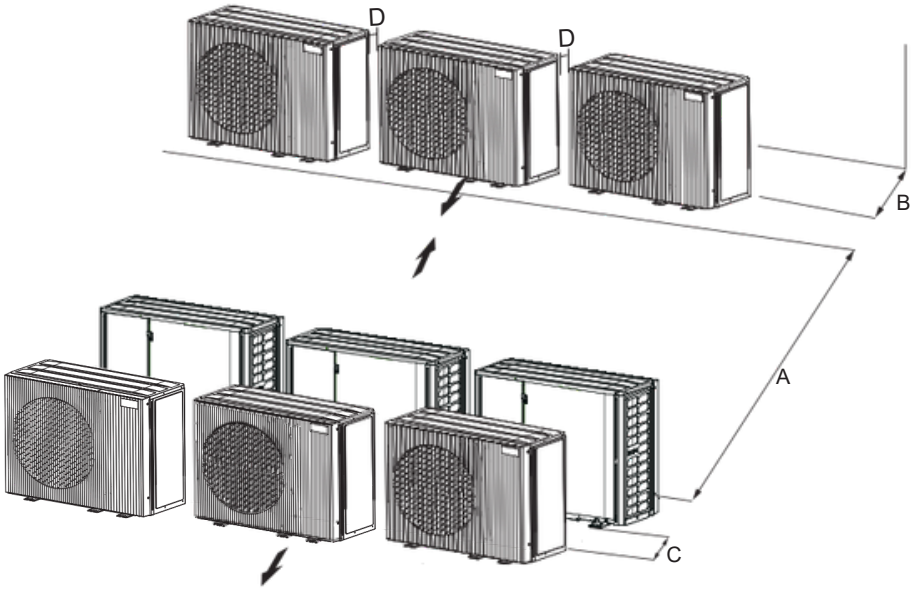

(Unit: mm)

Model	A	B	C	D
4 ~ 16 kW	≥ 3000	≥ 300	≥ 300	≥ 500

5 Hydraulic Installation

5.1 Preparations For Installation

NOTE

- Incaseofplastic pipes, makesurethey are fully oxygen-tight according to DIN 4726.
- The diffusion of oxygen into the piping can lead to excessive corrosion.

System Water Volume

Check the total water volume in the installation according to the expansion vessel.

For the selection of expansion vessel, due to the unit comes with an 8 L expansion vessel, refer to the formula below to determine whether an expansion vessel needs to be added to the external pipeline and the specification of the expansion vessel;

System With Only Water	System With 35 % Glycol
$V=\frac{4C*0.029}{3-Pg}$	$V=\frac{4C*0.0202}{3-Pg}$

V: Expansion vessel volume, in L;

C: System water volume, in L;

Pg: Expansion vessel Pre-pressure (relative pressure), in bar.

Flow Rate Range

The operation flow rate range of the unit is shown as below. Check and ensure that the flow rate in the installation is guaranteed in all conditions.

Model	4 kW	6 kW	8 kW	10 kW	12 kW	14 kW	16 kW
Flow rate range (m^3/h)	0.4* ~ 1.65	0.4* ~ 1.65	0.4* ~ 1.65	0.4* ~ 2.0	0.7* ~ 2.5	0.7* ~ 2.9	0.7* ~ 3.2

* The minimum water flow rate.

CAUTION

The heat exchanger could be damaged by freezing water due to low water flow rate.

5.2 Water Loop Connection

CAUTION

- Incorrectdirectionofthe water outletand inlet can cause unit malfunction.
- Do not apply excessive force when connecting the pipes provided on the site, and make sure the pipes are aligned properly. Water pipe deformation can cause unit malfunction.

NOTE

- Airventvalves must be installed at highest points of the water loop.
- Drain taps must be installed at lowest points of the water loop.

1) Connect the Y-type strainer to the water inlet of the unit, and seal the connection with thread sealant. (To provide access to the Y-type strainer for cleaning, an extension pipe can be connected between the strainer and the water inlet depending on the field conditions.)
2) Connect the pipe provided on the site to the water outlet of the unit.
3) Connect the outlet of the safety valve with a hose with a suitable size and length and guide the hose to the condensate drain.

CAUTION

- The installation of the Y-type strainer at the water inlet is mandatory.
- Pay attention to the correct flow direction of the Y-type strainer.
- Sediment may damage the plate heat exchanger, and there could be refrigerant leakage risk without strainer.
- It is recommended to use strainer with 80 mesh or higher.

NOTE

Problems caused by not installing a strainer are not covered by the warranty.

Domestic Hot Water

For the installation of the domestic hot water tank (supplied on the site), refer to the specific manual of the domestic hot water tank.

5.3 Filling Water Loop With Water

NOTE

Before filling with water, please check 5.7 Water for the water quality requirements. Pumps and valves may become stuck as a result of poor water quality.

- Make sure that all the pipeline installations are properly connected before carrying out the steps below.
- Connect the water supply to the filling valve and open the valve. Start filling water to the water circuit through the water supply (with pressure more than 1 bar (0.1 MPa)).
- Stop filling water if the free water flow through drainage hose of the safety valve.
- Switch ON the unit.
- Use the wired controller to turn on the water pump and remove the air accumulated in the water circuit. Please refer to the Operation Manual for specific operation methods.
- Make sure the water pump is running.
- Check and make sure that there is no water leakage at the pipe connection points.

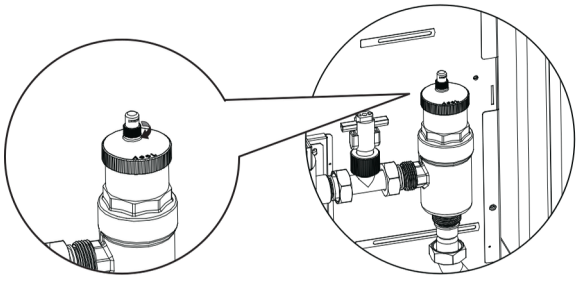

NOTE

- It is recommended to install a water pressure gauge before using the unit and water pressure should not be lower than 1 bar. At all times water pressure should remain 1 - 3 bar to avoid air entering the water circuit.
- If there is no water pressure gauge, the pressure of the water circuit can be judged through the safety valve. During filling, the unit might drain off too much water through the safety valve.
- When using the wired controller to remove air from the water circuit, please open all external air evacuation valves on the balance tank, etc.
- If there is trapped air in the water loop, it may trigger the wired controller to display error codes like L8, etc.

5.4 Filling Domestic Hot Water Tank With Water

Seethespecificmanualofthedomestic hot water tank.

5.5 Water Pipe Insulation

Thecompletewaterloop includingall pipes, must be insulated to prevent condensation during cooling operation, heating and cooling capacity reduction, and freezing of the outside water pipes in winter.

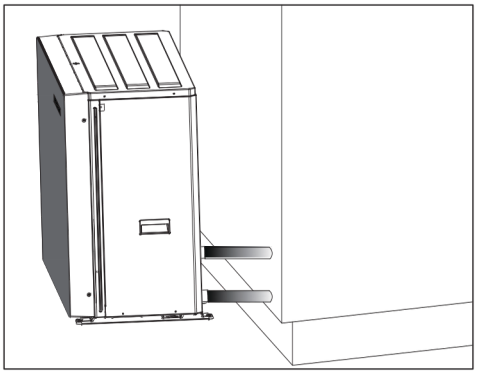

NOTE

- The insulation material should be provided with a fire resistance rating of B1 or above and comply with all applicable regulations.
- The thermal conductivity of the sealing material should be below 0.039 W/mK.

Recommended thickness of the sealing material is shown as below.

Piping Length (m) Between The Unit And The Terminal Device	Minimum Insulation Thickness (mm)
< 20	19
20 ~ 30	32
30 ~ 40	40
40 ~ 50	50

5.6 Freeze Protection

5.6.1 Protected By Software

•When the temperature of the water flow in the system drops to a certain value, the unit will achieve antifreeze function through water pump, heat pump, electric heating tape, or backup heater.

•The anti-freeze function is enabled only when the temperature increases to a certain value.

CAUTION

- Intheeventofpower failure, the above features would fail to protect the unit from freezing. Therefore, always keep the unit powered on.
- If the power supply for the unit is to be switched off for a long time, the water in the system pipe needs to be drained to avoid damage to the unit and pipeline system due to freezing.

5.6.2 Protected By Glycol

If the water temperature is low and a prolonged power outage occurs, it may lead to the freezing of the water loop. Glycol can lower the freezing point of water and meet antifreeze requirements by increasing the amount of glycol.

⚠ CAUTION

Ethylene glycol and propylene glycol are toxic.

⚠ CAUTION

Glycol can corrode the system. When uninhibited glycol comes into contact with oxygen, it becomes acidic. This corrosion process is accelerated by copper and high temperature. The acidic uninhibited glycol attacks metal surfaces, forming galvanic corrosion cells that can cause severe damage to the system. Therefore, it is important to follow these steps:

- Let a qualified specialist treat the water correctly;
- Select a glycol with corrosion inhibitors to counteract acids formed by the oxidation of glycols;
- Do not use any automotive glycol because its corrosion inhibitors have a limited lifetime and contain silicates which can contaminate or block the system;
- Do not use galvanized pipes in glycol systems as such pipes may lead to the precipitation of certain components in the glycol's corrosion inhibitor.

NOTE

Glycol absorbs moisture from the environment, so it is important to avoid using glycol exposed to air. If glycol is left uncovered, the water content increases, lowering the glycol concentration and potentially causing hydraulic components to freeze. To prevent this, take precautions and minimize glycol's exposure to air.

Types Of Glycol

The types of glycol that can be used depend on whether the system contains a domestic hot water tank:

If	Then
The system contains a domestic hot water tank	Only use propylene glycol (a)
The system does NOT contain a domestic hot water tank	Either propylene glycol (a) or ethylene glycol can be used

(a) Propylene glycol, including the necessary inhibitors, falls in Category III according to EN1717.

Required Concentration Of Glycol

The required concentration of glycol depends on the lowest expected outdoor temperature, and on whether you want to protect the system from bursting or from freezing. To prevent the system from freezing, more glycol is required.

Add propylene glycol (a) or ethylene glycol according to the table below.

Lowest Expected Outdoor Temperature	Prevention From Bursting	Prevention From Freezing
-5 °C	10 %	15 %
-10 °C	15 %	25 %
-15 °C	20 %	35 %
-20 °C	25 %	N/A
-25 °C	30 %	N/A
-30 °C	35 %	N/A

- Protection from bursting: Glycol can prevent the piping from bursting, but cannot prevent the liquid inside the piping from freezing.
- Protection from freezing: Glycol can prevent the liquid inside the piping from freezing.

NOTE

- The required concentration might vary depending on the type of glycol used. ALWAYS compare the requirements from the table above with the specifications provided by the glycol manufacturer. If necessary, meet the requirements set by the glycol manufacturer.
- The added concentration of glycol should NEVER exceed 35 %.
- If the liquid in the system is frozen, the pump will NOT be able to start. Please note that solely preventing the system from bursting may not prevent the liquid inside from freezing.
- If water remains stagnant within the system, it is highly likely to freeze and result in system damage.

5.7 Water

NOTE

- Circulators function well exclusively with clean and high-quality tap water.
- Risk of material damage due to poor-quality water.
- The most frequent factors that can affect circulators and the system are oxygen, limescale, sludge, acidity level and other substances (including chlorides and minerals).
- In addition to the quality of water, installation also plays an important role. The heating system must be airtight. Choose materials that are not sensitive to oxygen diffusion (risk of corrosion...).

Characteristics Of The Water

- Compliant with local regulations.
- Langelier Index (LI) between 0 and +0.4.

•Within the limits indicated in the chart.

Water quality must be checked by qualified personnel.

Hardness

If the water is hard, install a system suitable to preserve the unit from harmful deposits and limestone formation.

NOTE

If necessary, fit a water softener to reduce water hardness.

Cleanliness

Before connecting the water to the unit, clean the system thoroughly with specific products effective to remove residues or impurities that may affect functioning. Existing systems must be free from sludge and contaminants and protected against buildups.

New Systems

In case of new installations, it is essential to wash the entire installation (with the circulator uninstalled) before commissioning the central installation. This removes residues of the installation process (welding, waste, joint products...) and preservatives (including mineral oil). The system must then be filled with clean high-quality tap water.

Existing Systems

If a new boiler or heat pump is installed on an existing heating system, the system must be rinsed to avoid the presence of particles, sludge and waste. The system must be drained before installing the new unit. Dirt can be removed only with a suitable water flow. Each section must then be washed separately.

Particular attention must also be paid to “blind spots” where a lot of dirt can accumulate due to the reduced water flow. The system must then be filled with clean high-quality tap water. If, after rinsing, the quality of the water is still unsuitable, a few measures must be taken to avoid problems. An option to remove pollutants is to install a strainer. Various types of strainers are available. A mesh strainer is designed to catch large dirt particles. This strainer is usually placed in the part with the larger flow. A tissue strainer is designed to catch the finer particles.

Water Component For Corrosion Limit On Copper

PH	7.5 - 9.0	
Electric Conductivity	100 - 500	µS/cm
Ryznar Stability Index (RSI)	< 6.0	
Total Hardness	4.5 - 8.5	dH
Max. Quality Glycol	40	%
Sulfate Ions (SO4)	< 50	ppm
Alkalinity (HCO3)	70 - 300	ppm
Chloride Ions (Cl^-)	< 50	ppm
Phosphates (PO4)	< 2.0	ppm
NH3	< 0.5	ppm
Iron (Fe)	< 0.3	ppm
Manganese (Mn)	< 0.05	ppm
Sulfate Ions (S)	None	
Ammonium Ions (NH4)	None	
Silica (SiO2)	< 30	ppm
CO2	< 50	ppm
Oxygen Content	< 0.1	ppm
Sand	< 10 mg/L, 0.1 to 0.7 mm max diameter	
Ferrite Hydroxide Fe3O4	Dose < 7.5 mg/L, 50 % of mass, with diameter < 10 µm	
(black) Iron Oxide Fe2O3 (red)	Dose < 7.5 mg/L, diameter < 1 µm	

6 Electrical Installation

DANGER

Risk of electrocution.

WARNING

- The appliance should be installed in accordance with national wiring regulations.
- Follow WIRING DIAGRAM for electrical wiring that is located on the rear side of the electrical box cover.
- This appliance incorporates an earth connection for functional purposes only.
- Be sure to install the required fuses or circuit breakers. An all-pole disconnection switch having a contact separation of at least 3 mm in all poles should be connected in fixed wiring.
- It is prohibited to install emergency stop switches, remote switches which for stopping the unit, including circuit breaker, contactor and relay, within 2 meters of the unit.

Refer to the INSTALLATION, OPERATION AND MAINTENANCE MANUAL for more practical instructions.

6.1 Opening The Electrical Box Cover

To access the unit for installation and maintenance, follow the instructions below.

WARNING

- Risk of electrocution.
- Risk of burning.

NOTE

Keep the screws properly for later use.

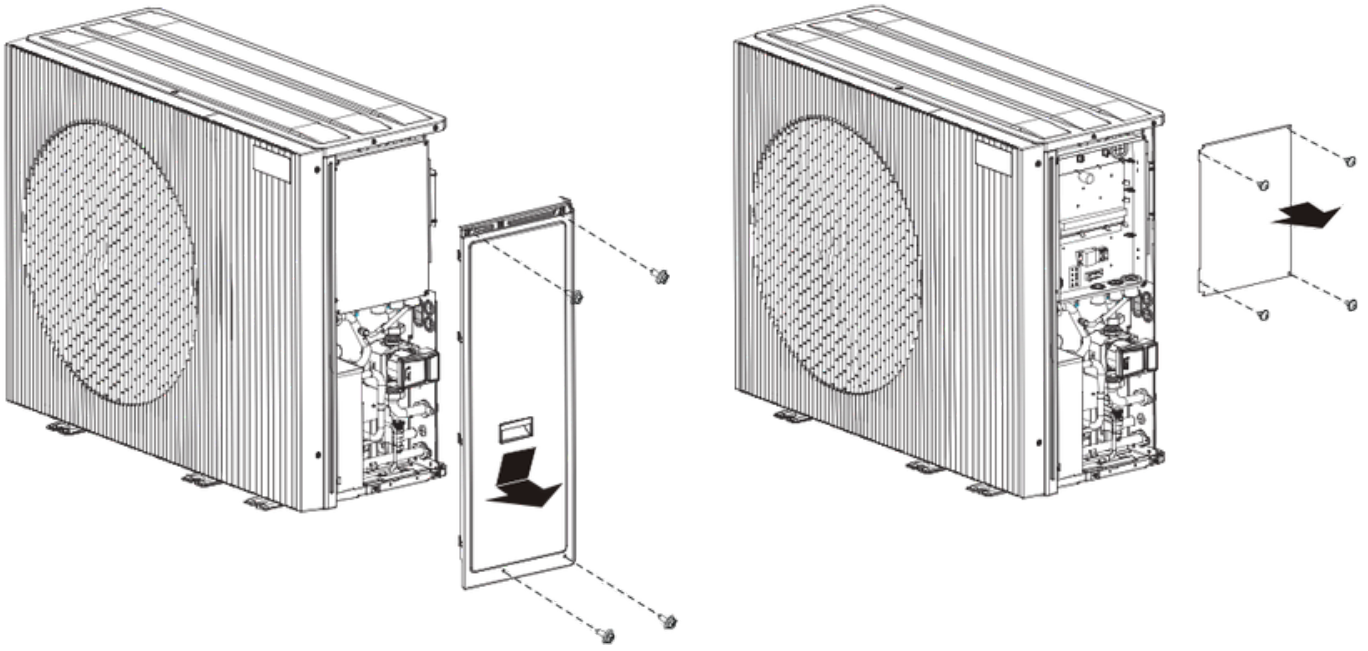

6.2 Back Plate Layout For Wiring

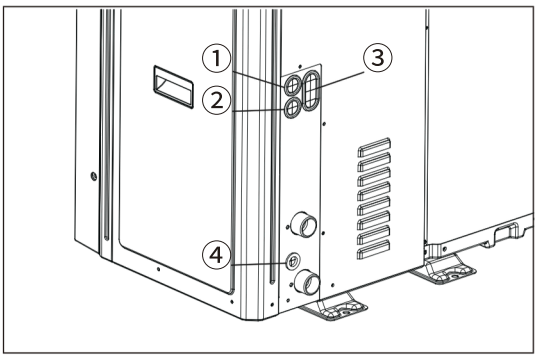

①②	For high voltage wiring.
③	For low voltage wiring.
④	Safety valve drain.

6.3 Electrical Wiring

OperatingCurrentAndWire Diameter

Refer to 6.4.6 of the Installation Manual (this manual).

Tightening Torques

Item	Tightening Torque (N•m)
M4 (power terminal, electric control board terminal)	1.2 to 1.4
M4 (earthed)	1.2 to 1.4

6.4 Field Wiring

⚠ WARNING

Amain switchorother means of disconnection, having a contact separation in all poles, must be incorporated in the fixed wiring in accordance with relevant local laws and regulations. Switch off the power supply before making any connections.
Use only copper wires. Never squeeze bundled cables and make sure they do not come in contact with the piping and sharp edges. Make sure no external pressure is applied to the terminal connections. All field wirings and components must be installed by a licensed electrician and must comply with relevant local laws and regulations.
The field wiring must be carried out in accordance with the wiring diagram supplied with the unit and the instructions given below.
Be sure to use a dedicated power supply. Never use a power supply shared by another appliance.
Be sure to establish a ground. Do not ground the unit to a utility pipe, surge protector, or telephone ground. Incomplete grounding may cause electrical shock.
Be sure to install a ground fault circuit interrupter (30 mA). Failure to do it may cause electrical shock.
Be sure to install the required fuses or circuit breakers.

6.4.1 Precautions On Electrical Wiring Work

- Fix cables so that cables do not make contact with the pipes (especially on the high pressure side).
- Secure the electrical wiring with cable ties as shown in figure so that it does not come in contact with the piping, particularly on the high-pressure side.
- Make sure no external pressure is applied to the terminal connectors.
- When installing the ground fault circuit interrupter make sure that it is compatible with the inverter (resistant to high frequency electrical noise) to avoid unnecessary opening of the ground fault circuit interrupter.

NOTE

The ground fault circuit interrupter must be a high-speed type breaker of 30 mA (< 0.1 s).

- This unit is equipped with an inverter. Installing a phase advancing capacitor not only will reduce the power factor improvement effect, but also may cause abnormal heating of the capacitor due to high-frequency waves. Never install a phase advancing capacitor as it could lead to an accident.

6.4.2 Wiring Overview

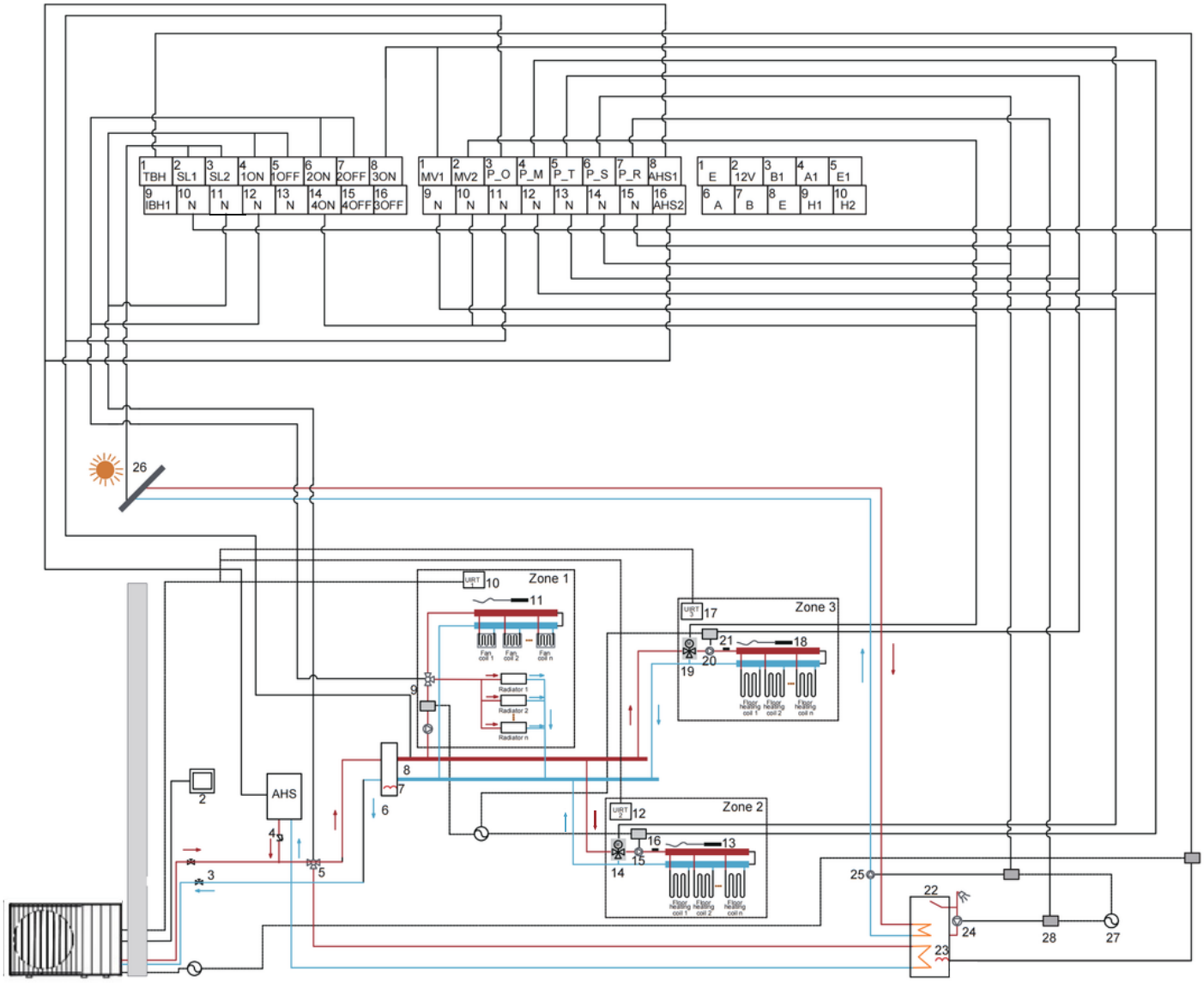

Code	Assembly unit	Code	Assembly unit
1	Monobloc	15	Zone 2 pump (P_M)
2	Wired controller	16	Zone 2 floor heating water inlet temperature sensor (Tw_2)
3	Stop valve	17	Zone 3 room thermostat
4	Check valve	18	Zone 3 indoor temperature sensor (Tr_3)
5	Three-way valve 1 (SV1)	19	Zone 3 mixing valve
6	Buffer tank	20	Zone 3 pump (P_T)
7	Buffer tank electric heater (IBH1)	21	Zone 3 floor heating water inlet temperature sensor
8	Zone 1 pump (P_O)	22	Domestic hot water tank
9	Three-way valve 2 (SV2)	23	Water tank electric heating (TBH)
10	Zone 1 room thermostat	24	Domestic hot water pump (P_R)
11	Zone 1 indoor temperature sensor (Tr_1)	25	Solar energy water pump (P_S)
12	Zone 2 room thermostat	26	Solar panels
13	Zone 2 indoor temperature sensor (Tr_2)	27	Power supply
14	Zone 2 mixing valve	28	Contactor

NOTE

a. When using the mixing valve in Zone 2, the terminals connected are position 1 (MV1), 8 (3ON), 9 (N).

b. When using the mixing valve in Zone 3, the terminals connected are position 2 (MV2), 14 (4ON), 10 (N).

c. Code 3-28 are field supply.

Wiring Requirements				
Item	Description	Current	Required Number Of Conductors	Maximum Running Current
1	Solar energy kit signal cable	AC	2	200 mA
2	User interface cable	AC	5	200 mA
3	Room thermostat cable	AC	2	200 mA (1)
4	Solar pump control cable	AC	2	200 mA (1)
5	Outside circulation pump control cable	AC	2	200 mA (1)
6	DHW pump control cable	AC	2	200 mA (1)
7		AC	3	200 mA (1)
8	SV1: Three-way valve control cable	AC	3	200 mA (1)
9	SV2: Three-way valve control cable	AC	3	200 mA (1)
10	SV3: Three-way valve control cable	AC	3	200 mA (1)
11	SV4: Three-way valve control cable	AC	3	200 mA (1)
12	MV1: Mixing valve control cable	AC	3	200 mA (1)
13	MV2: Mixing valve control cable	AC	2	200 mA (1)
	Booster heater control cable			

(1) Minimum cable section AWG18 (0.75 mm²).

If the current of the load is large, an AC contactor is needed.

NOTE

Please use H07RN-F for the power wire, all the cables are connected to high voltage except for thermistor cable and cable for user interface.

Equipment must be grounded.

- All high-voltage external load, if it is metal or a grounded port, must be grounded.
- The total current drawn by all external loads on PCB AP1 (excluding TBH, IBH1, and AHS) shall not exceed 1.2 A. If this limit is exceeded, AC contactors must be used.
- "AHS1" "AHS2", "H" "C" etc, wiring terminal ports provide only the switch signal.
- Please refer to image of 6.2.7 to get the ports position in the unit.
- Plate heat exchanger E-Heating tape and Expansion vessel E-Heating tape share a control port.

Field wiring guidelines.

- Most field wiring on the unit is to be made on the terminal block inside the switch box. To gain access to the terminal block, remove the switch box service panel.

WARNING

Switch off all power including the unit power supply and backup heater and domestic hot water tank power supply (if applicable) before removing the switch box service panel.

- Fix all cables using cable ties.
- A dedicated power circuit is required for the backup heater.
- Installations equipped with a domestic hot water tank (field supply) require a dedicated power circuit for the booster heater.
- Lay out the electrical wiring so that the front cover will not rise up when doing wiring work and attach the front cover securely.
- Follow the electric wiring diagram for electrical wiring works (the electric wiring diagrams are located on the service panel).
- Install the wires and fix the cover firmly so that the cover may be fit in properly.

6.4.3 Wiring Overview Of Cascade System

Please connect the wired controller to the master unit and use it to control the cascade system. Refer to the Operation Manual for specific using methods.

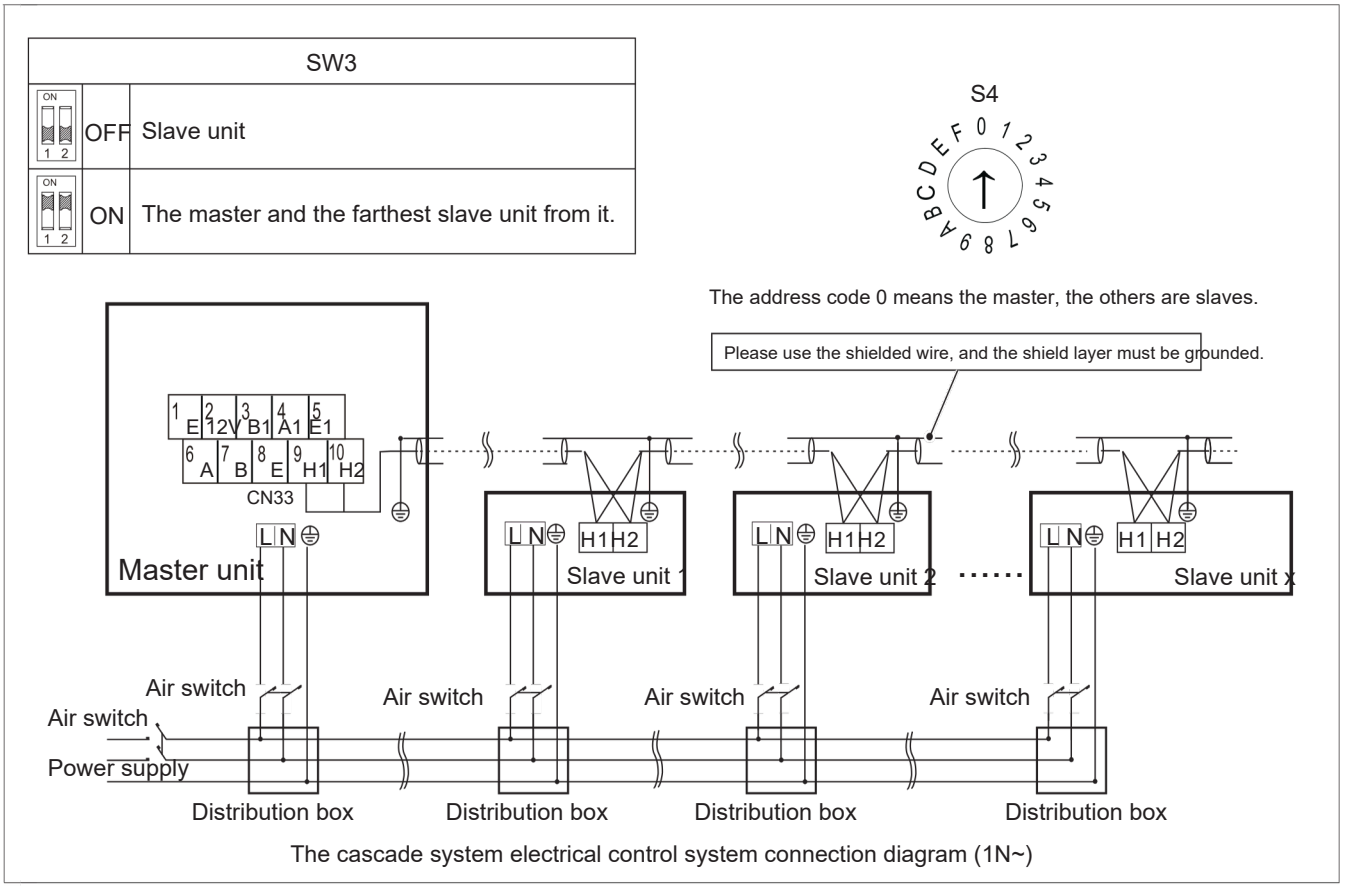

The cascade system electrical control system connection diagram (1N~)

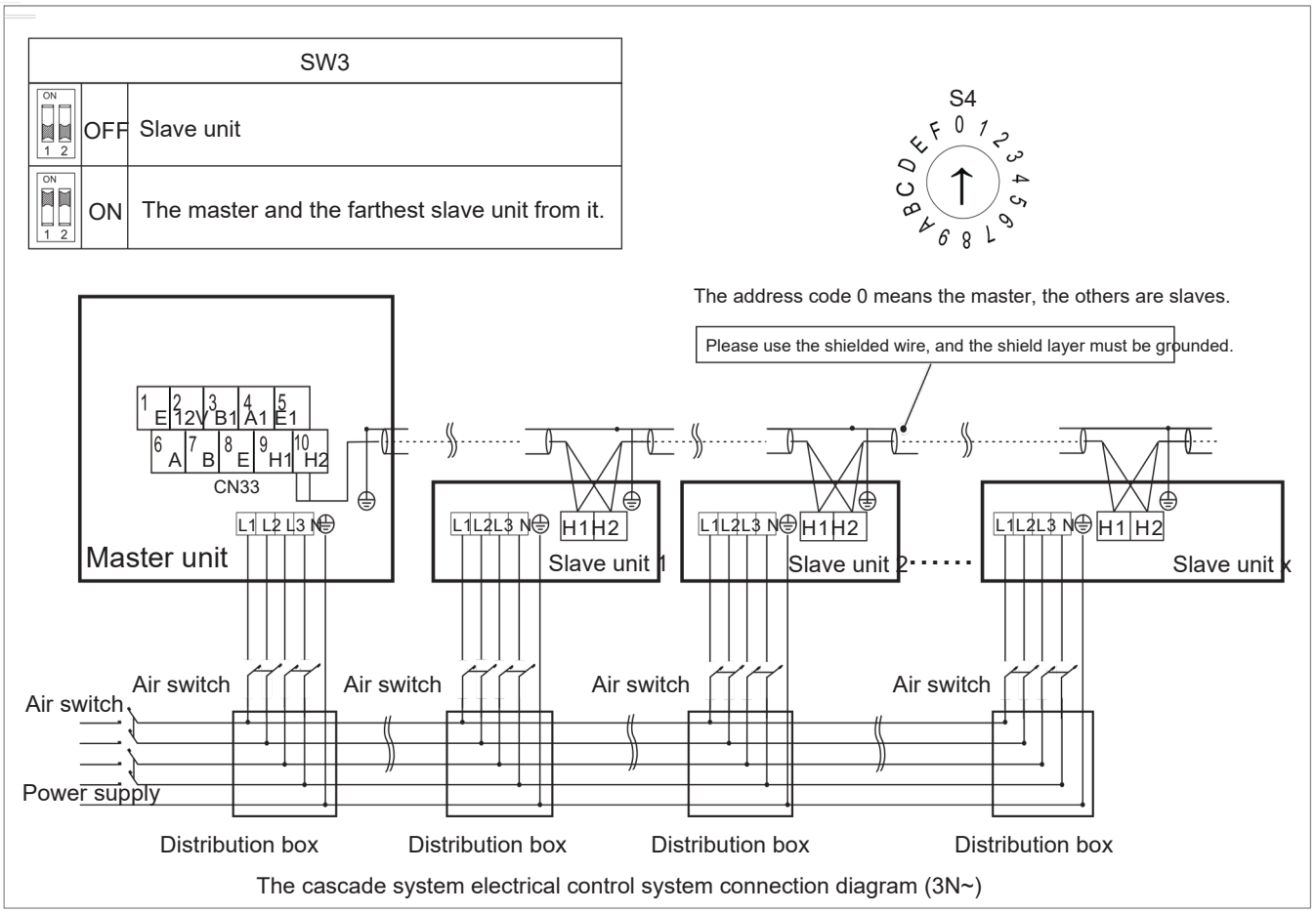

The cascade system electrical control system connection diagram (3N~)

CAUTION

- The cascade function of the system only supports 8 machines at most.
- In order to ensure the success of automatic addressing, all machines must be connected to the same power supply and powered on uniformly.
- Only the Master unit can connect the controller, and you must put the SW3 to “on” of the master unit, the slave unit cannot connect the controller.
- Please use the shielded wire, and the shield layer must be grounded.
- Engineering load wiring must meet the requirements of double insulation and the outermost insulation thickness ≥1mm.
- The engineering load wiring needs to be routed through pipelines or walls.

Cascade System For Heating Or Hot Water Production

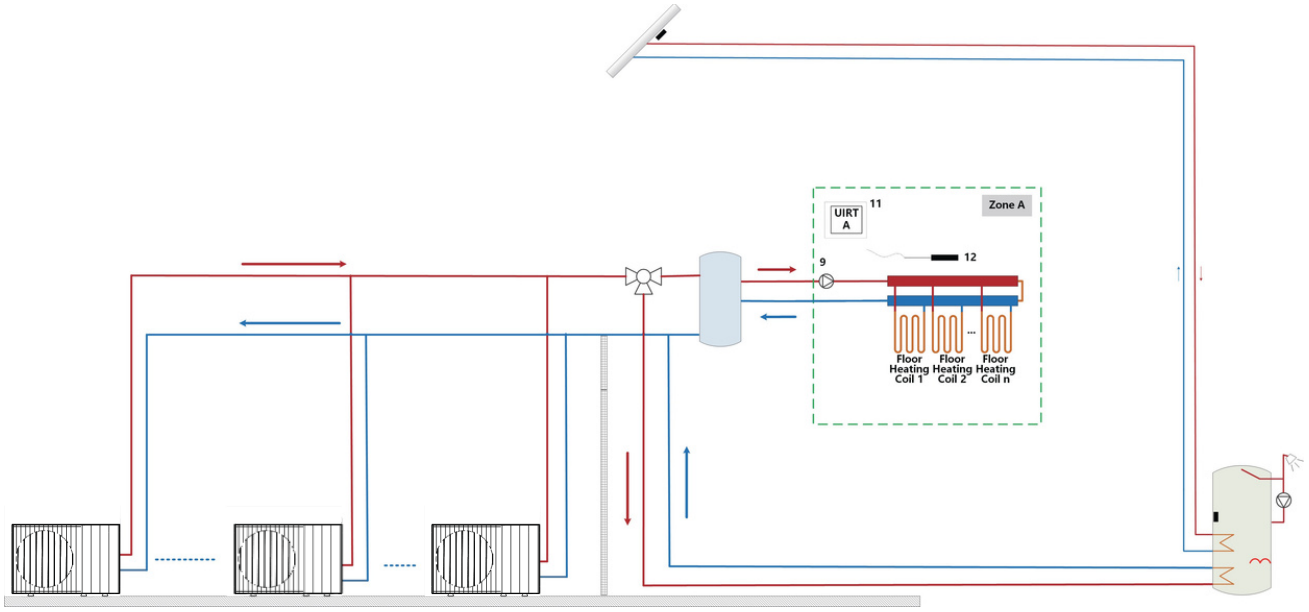

Cascade System For Simultaneous Heating And Hot Water Production

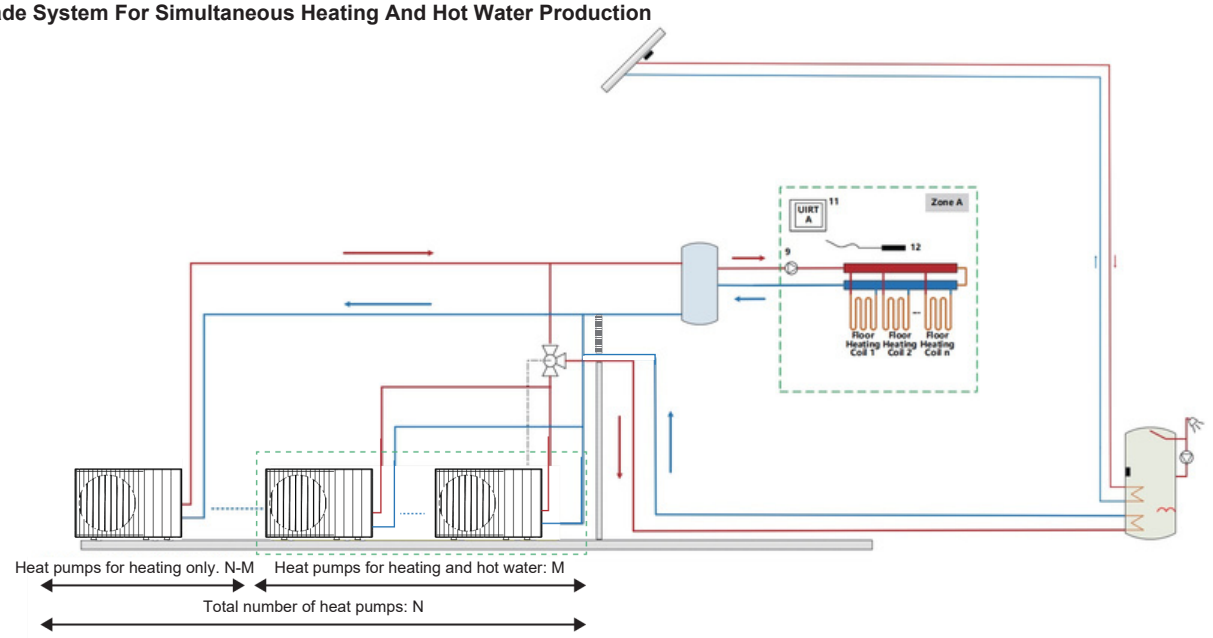

NOTE

- M and N are parameters that can be set on the wired controller.
- The wiring of the three-way valve is directly connected to the master unit.
- The cascade system needs to be equipped with a balance tank temperature sensor.

- **Domestic Water Heating**

  Themasterunitandtheslaveunit can run DHW mode. DHW mode and cool mode can’t run at the same time.

- **Domestic Hot Water Tank (Field Supply)**

  Adomestic hotwater tank (withconfiguringbooster heater or not) can be connected to the unit.

  The booster heater should be installed below the temperature sensor.

  The heat exchanger (coil) should be installed below the temperature sensor.

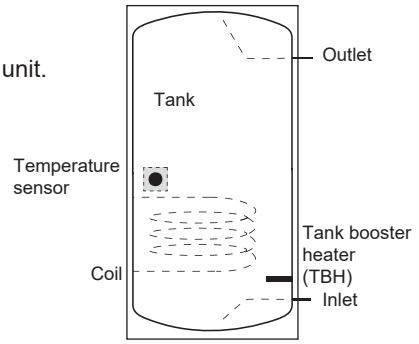

Unit		4 ~ 6 k W	8 ~ 10 kW	12 ~ 16 kW
Volume of tank (L)	Recommended	100 ~ 250	150 ~ 300	2 00 ~ 500
Heat exchange area (m ²)	Minimum	2.0	2.0	2.5
Water flow (L/min)	Recommended	17.2	27.2	45.9

Performance data for third-party tanks CANNOT be provided, and water heating performance CANNOT be guaranteed if heat exchange area or water flow cannot be guaranteed.

- **Slave Heating**

  All slaveunits can run in cooling, heating or DHW mode, and the running mode and temperature setting change with the change of the master unit.

  There maybe multipleunitsrunningatdifferent times due to changes in outdoor temperature and indoor required load.

- **AHS (Auxiliary Heat Source) Control**

  AHS shouldbeconnectedtothecorresponding port of the master unit, and only controlled by the master unit, not controlled by the slave unit.

- **TBH (Tank Booster Heater) Control**

  TBH shouldbeconnectedtothecorresponding port of the master unit, and only controlled by the master unit, not controlled by the slaveunit.

- **Solar Energy Control**

  SolarEnergy Control should be connected to the corresponding port of the master unit, and only controlled by the master unit, not controlled by the slave unit.

NOTE

- Maximum 8 units can be cascaded in on system. One of them is master unit,the others are slave units; master unit and slave units are distinguished by whether connected to wired controller while powering on. The unit with wired controller is master unit and the units without wired controller are slave units: The master unit and the slave units can run in cooling, heating or DHW mode. During installation, please check the cascade system diagram and determine the master unit; before powering on, remove all wired controllers from slave units.
- SV1、SV2、SV3、P_T、P_M、P_O、P_S、P_R、MV1、MV2、SL1、SL2、AHS、TBH、M1M2、SG、EVU、C3L3、C2L2、C1L1 port only need to be connected to corresponding ports on main board of master unit.
- The system is with auto-addressing function. After each time powering on, the unit will read its own transmission address as the cascade address, address 0 is the master unit, and addresses 1-7 are slave unit.
- If an error code occurs, please check whether the communication line of the cascade unit is connected properly and whether the cascade setting of the wired controller is correct.

CAUTION

- In the cascaded system, the system's final outlet water temperature sensor of the system (Ttots) must be connected to the master unit, and Ttots must be set on the wired controller to be valid.
- If outside circulation pump needs to be connected in series in system when the head of internal water pump is not enough, outside circulation pump is suggested to be installed after the balance tank.
- Please ensure that the maximum interval between power-on times of all units does not exceed 2 minutes. If it exceeds the maximum communication detection time of the master and slave for 2 minutes, a cascade communication failure En will be reported.
- The outlet pipe of each unit must be installed with a check valve.

Balance Tank Volume Requirement

NO.	Model	Balance Tank (L)
1	4 ~ 6 kW	≥ 25
2	8 ~ 16 kW	≥ 40
3	Cascade system	≥ 40*n

n: The outdoor unit numbers

6.4.4 Precautions On Wiring Of Power Supply

- Usearound crimp-styleterminal forconnectiontothepower supply terminal board. In case it cannot be used due to unavoidable reasons, be sure to observe the following instructions.
  - Do not connect different gauge wires to the same power supply terminal. (Loose connections may cause overheating.)
  - When connecting wires of the same gauge, connect them according to the figure below.

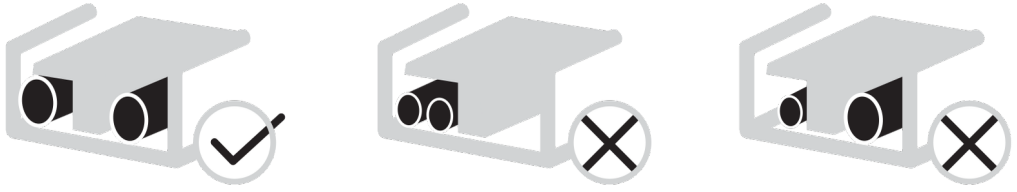

- Use the correct screwdriver to tighten the terminal screws. Small screwdrivers can damage the screw head and prevent appropriate tightening.
- Over-tightening the terminal screws may damage the screws.
- Attach a ground fault circuit interrupter and fuse to the power supply line.
- When wiring, make certain that prescribed wires are used, carry out complete connections, and fix the wires so that outside force cannot affect theterminals.

6.4.5 Safety Device Requirement

Table 1

Rated Current of Appliance: (A)	Nominal Cross-sectional Area (mm^2)	
	Flexible Cords	Cable for Fixed Wiring
≤ 3	0.5 and 0.75	1 and 2.5
> 3 and ≤ 6	0.75 and 1	1 and 2.5
> 6 and ≤ 10	1 and 1.5	1 and 2.5
> 10 and ≤ 16	1.5 and 2.5	1.5 and 4
> 16 and ≤ 25	2.5 and 4	2.5 and 6
> 25 and ≤ 32	4 and 6	4 and 10
> 32 and ≤ 50	6 and 10	6 and 16
> 50 and ≤ 63	10 and 16	10 and 25

Table 2

System	Power Current			
	Min. (V)	Max. (V)	RHPA(A)	REHA (A)
4 kW	198	264	12.5	/
6 kW	198	264	12.5	/
8 kW	198	264	19	/
10 kW	198	264	19	/
12 kW	198	264	29.5	/
14 kW	198	264	29.5	/
16 kW	198	264	29.5	/
3 kW heater - 1 PH	198	264	/	14
8 kW - 3 PH	342	456	11	/
10 kW - 3 PH	342	456	11	/
12 kW - 3 PH	342	456	13	/
14 kW - 3 PH	342	456	13	/
16 kW - 3 PH	342	456	13	/
3 kW heater - 3 PH	342	456	/	5
6 kW heater - 3 PH	342	456	/	9
9 kWheater - 3 PH	342	456	/	14
			/	

NOTE

REHA:Rated Electric Heating Amps. (A).

RHPA:Rated Heat Pump Amps. (A).

Table 3

Unit	Maximum Overcurrent Protector (A)		Wiring Size (mm²)	
	Heat Pump	Electric Heater	Heat Pump	Electric Heater
4 - 6 kW 1- PH	16 A	/	3 × 1.5	/
4 - 6 kW 1 - PH (3 kW heater)	16 A	25 A	3 × 1.5	3 × 1.5
8 - 10 kW 1 - PH	25 A	/	3 × 2.5	/
8 - 10 kW 1 - PH (3 kW heater)	25 A	25 A	3 × 2.5	3 × 1.5
12 - 16 kW 1 - PH	40 A	/	3 × 4	/
12 - 16 kW 1 - PH (3 kW heater)	40 A	25 A	3 × 4	3 × 1.5
8 - 10 kW 3 - PH	16 A	/	5 × 1.5	/
8 - 10 kW 3 - PH (6 kW heater)	16 A	16 A	5 × 1.5	5 × 1.5
8 - 10 kW 3 - PH (9 kW heater)	16 A	25 A	5 × 1.5	5 × 1.5
12 - 16 kW 3 - PH	20 A	/	5 × 1.5	/
12 - 16 kW 3 - PH (6 kW heater)	20 A	16 A	5 × 1.5	5 × 1.5
12 - 16 kW3 - PH (9 kW heater)	20 A	25 A	5 × 1.5	5 × 1.5

NOTE

The ground fault circuit interrupter must be a high-speed type breaker of 30 mA (< 0.1 s). Flexible cord must meet 60245IE (H07RN-F) standards.

6.4.6 Specifications Of Standard Wiring Components

1)Equipment Main Power Supply Wiring

Power Supply Wiring needs to be routed through pipelines or walls.

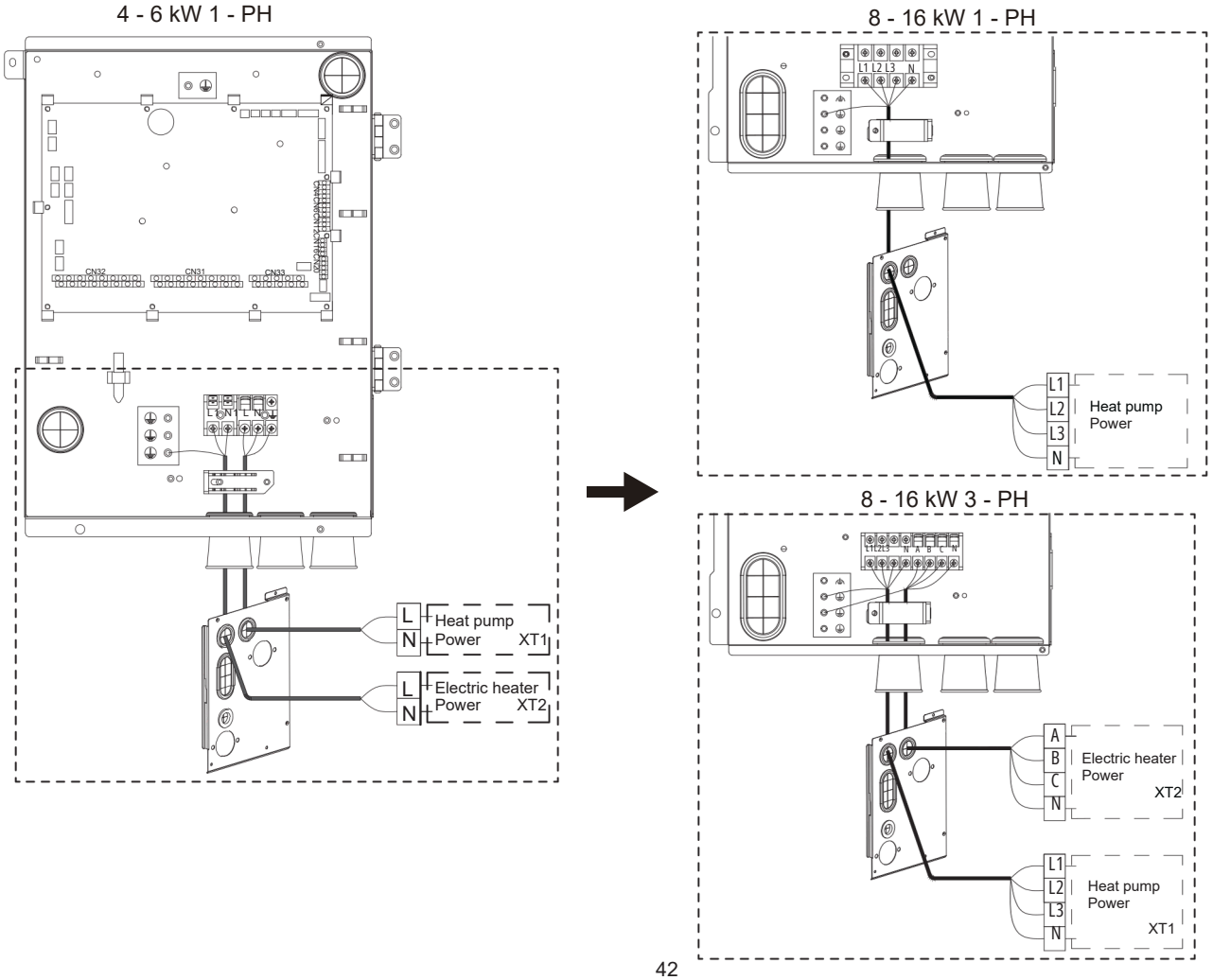

2) Equipment Wire Controller Cable

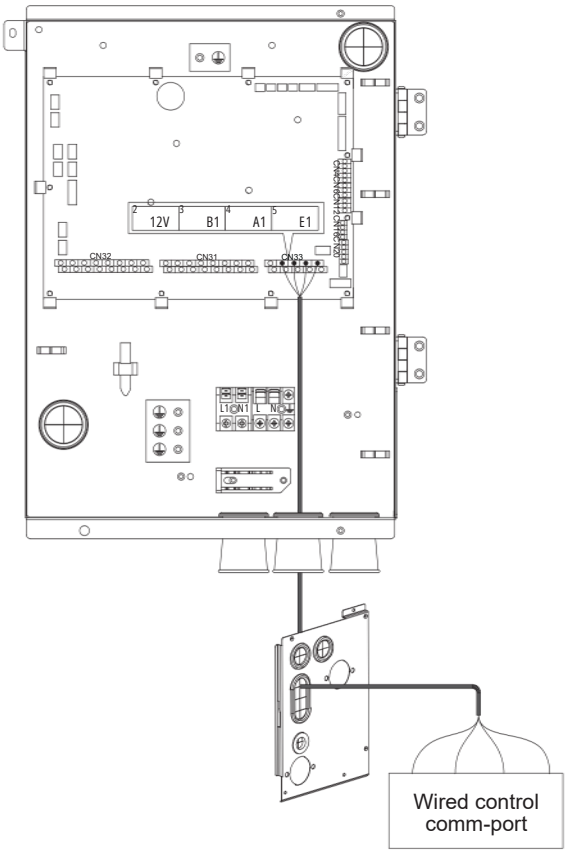

The wired controller cable needs to be routed through pipelines or walls.

When connecting to the power supply terminal, use the circular wiring terminal with the insulation casing. Use power cord that conforms to the specifications and connect the power cord firmly. To prevent the cord from being pulled out by external force, make sure it is fixed securely.

If circular wiring terminal with the insulation casing cannot be used, please make sure that: do not connect two power cords with different diameters to the same power supply terminal (may cause overheating of wires due to loose wiring).

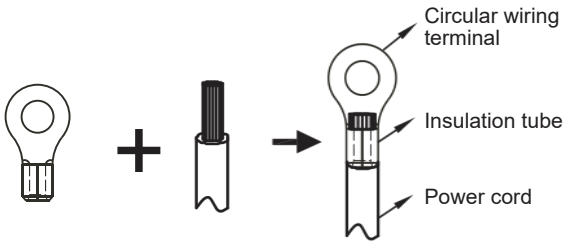

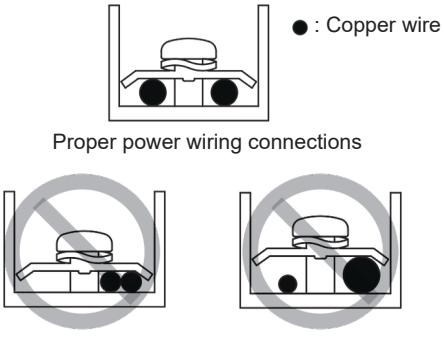

6.4.7 Connection For Other Components

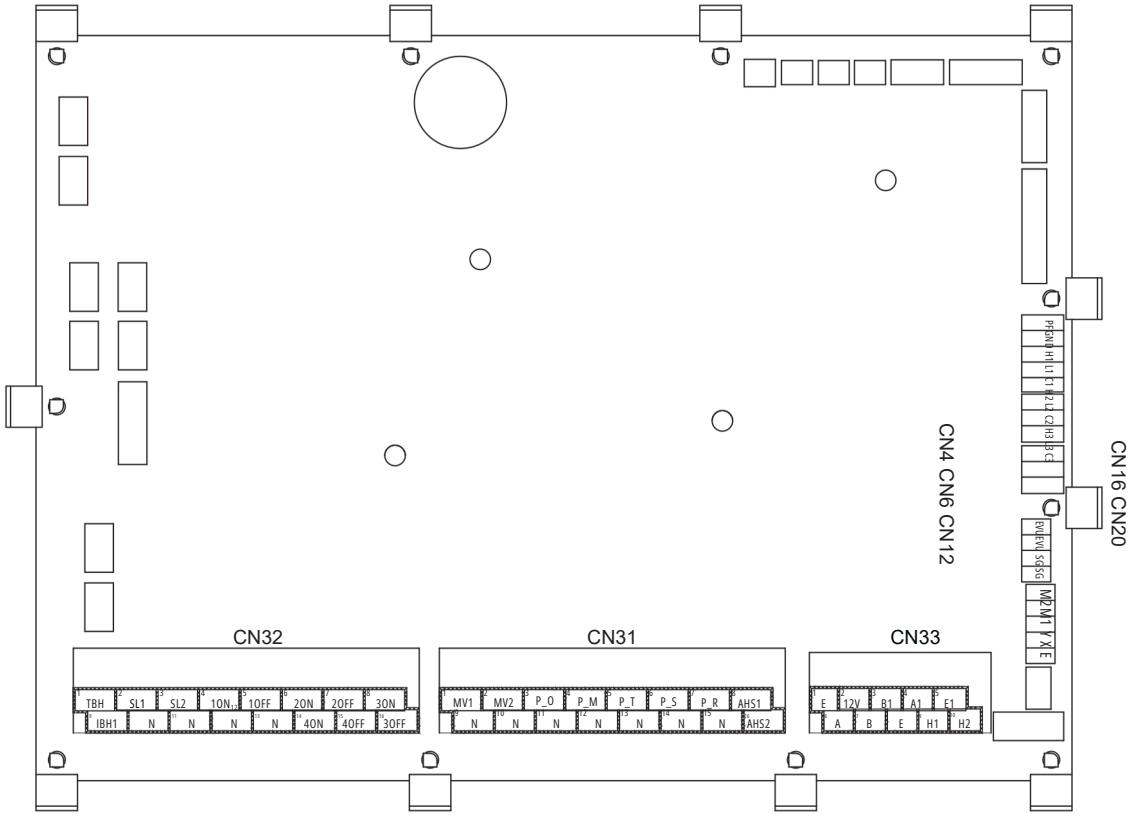

Print	Connect To	Print	Connect To	Print	Connect To	
TBH		4ON*		H3		
N	Water tank electric heating	MV2	Mixing valve 2	L3	Zone 3 thermostat	
IBH1		N		C3		
N	Pipe electric heating	P_O		12V		
SL1		N	Zone 1 pump	B1	Wired controller comm-port	
SL2	Solar energy signal port	P_M		A1		
1ON		N	Zone 2 pump	E1		
1OFF	Three-way valve 1	P_T		H1		
N		N	Zone 3 pump	H2	Cascade comm-port	
2ON		P_S		X		
2OFF	Three-way valve 2	N	Solar energy water pump	Y	MODBUS expansion board comm-port	
N		P_R		M1		
3ON*		N	Domestic water pump	M2	Remote switch	
3OFF	Three-way valve 3	AHS1		SG		
N		AHS2	Auxiliary heat source control	SG	Solar energy	
3ON*		H1		EVU		
MV1	Mixing valve 1	L1	Zone 1 thermostat	EVU	Commercial power	
N		C1				
4ON*		H2		XT1	1-PH L N	Heat pump power supply
4OFF	Three-way valve 4	L2	Zone 2 thermostat			
N		C2		XT2	1-PH L N	Electric heater power supply

*3ON & 4ON: Connect only to either the Zone 2/3 three-way valve or mixing valve.

1) For Solar Signal Input

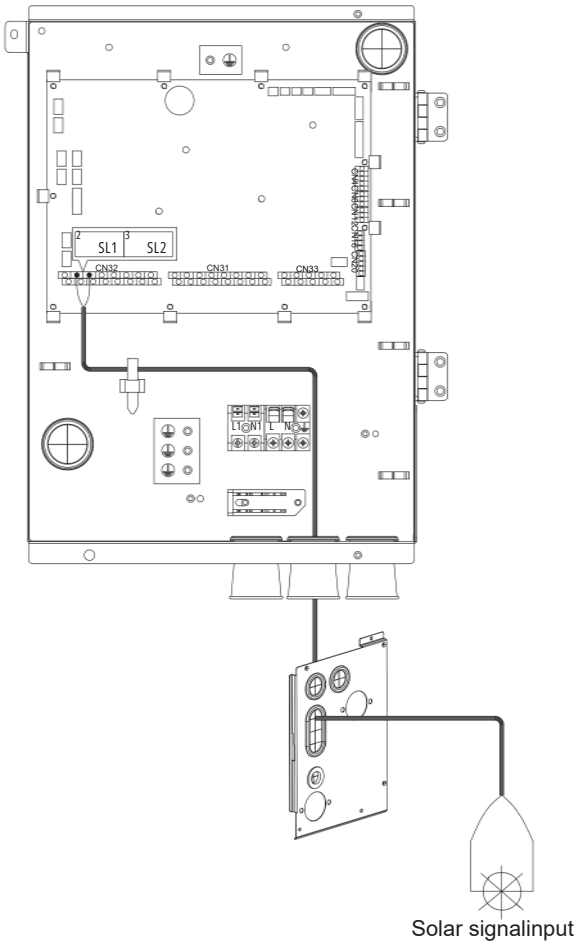

2) For 3-way Valve 1 (SV1)

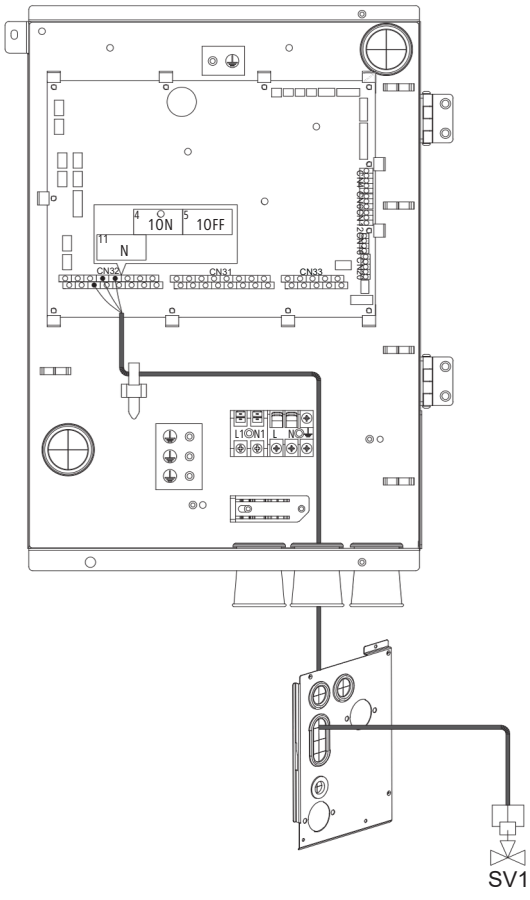

For 3-way Valve 2 (SV2)

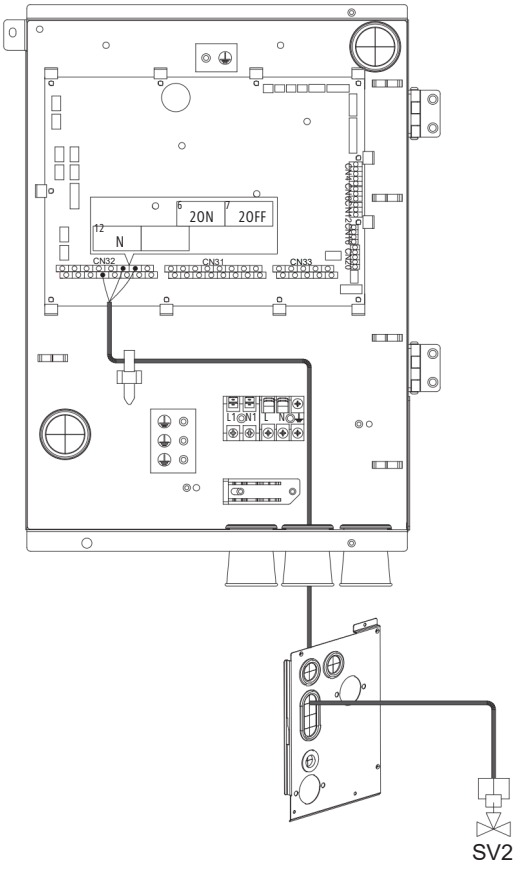

For 3-way Valve 3 (SV3)

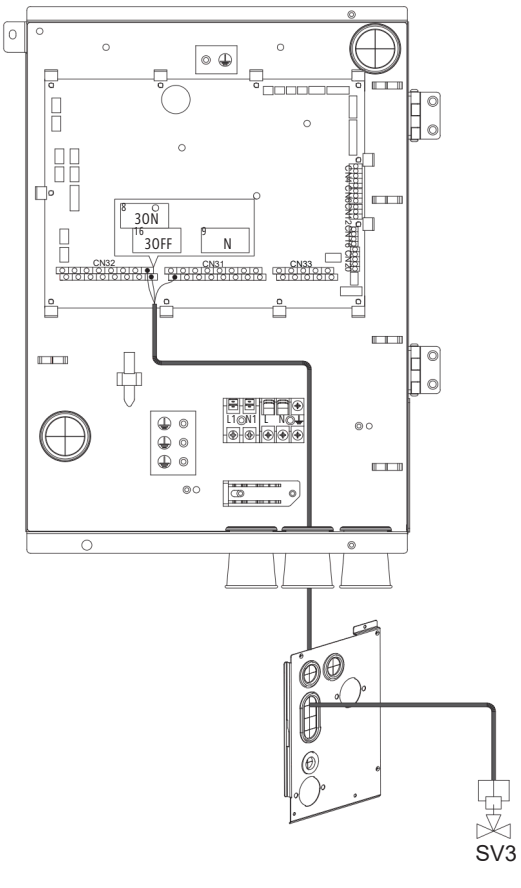

For 3-way Valve 4 (SV4)

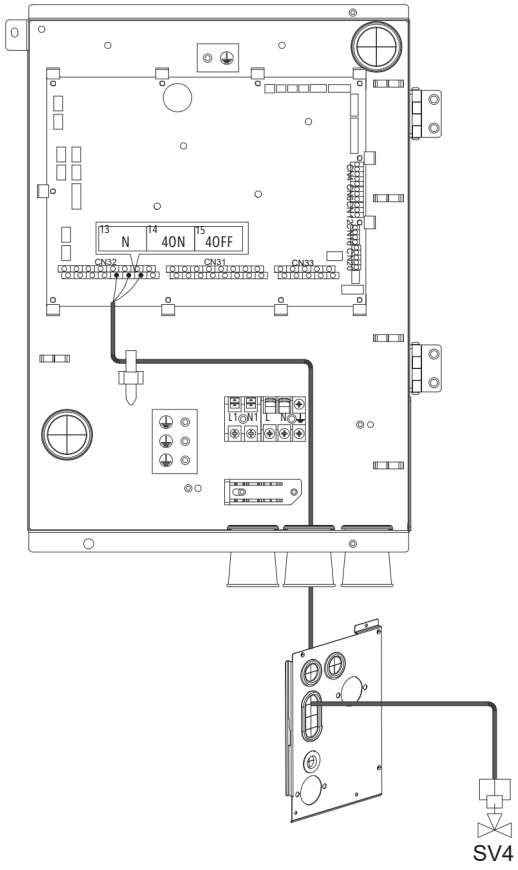

For Mixing Valve 2

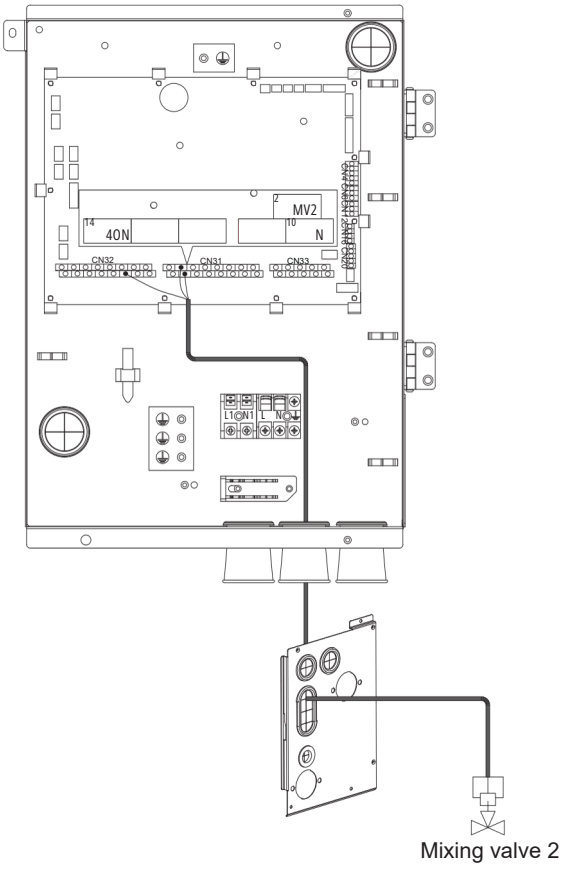

3) For Mixing Valve 1

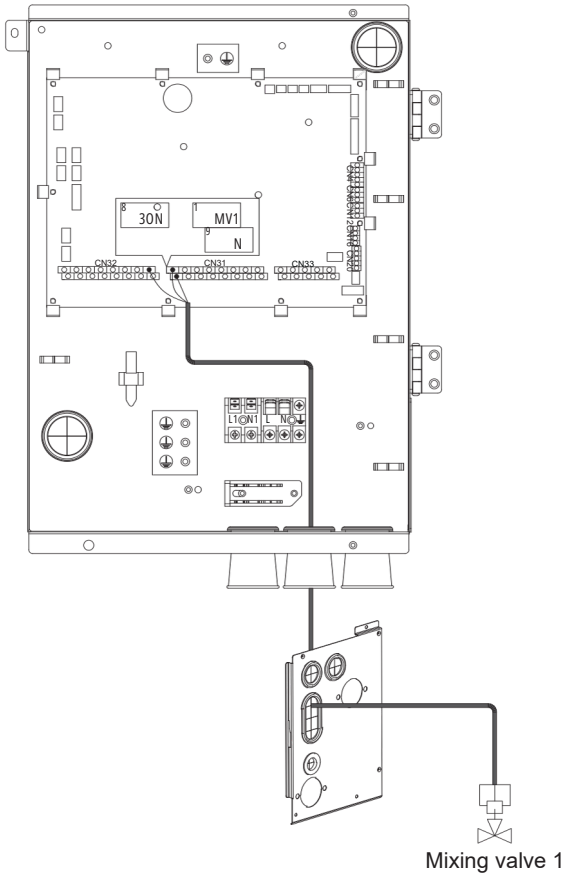

NOTE

- For themixing valve, when the water temperature is too high, keep the MV port output for a period of time and then stop, increase the proportion of cold water, and lower the water temperature. When the water temperature is too low, keep the ON port output for a period of time and then stop, increase the proportion of hot water and raise the water temperature.
- If the wiring of the MV and ON ports is reversed, it will cause the mixing valve to fail, and the water temperature that is too high or too low cannot be restored to the target water temperature again.

4) For 1 Zone Pump (P_O)

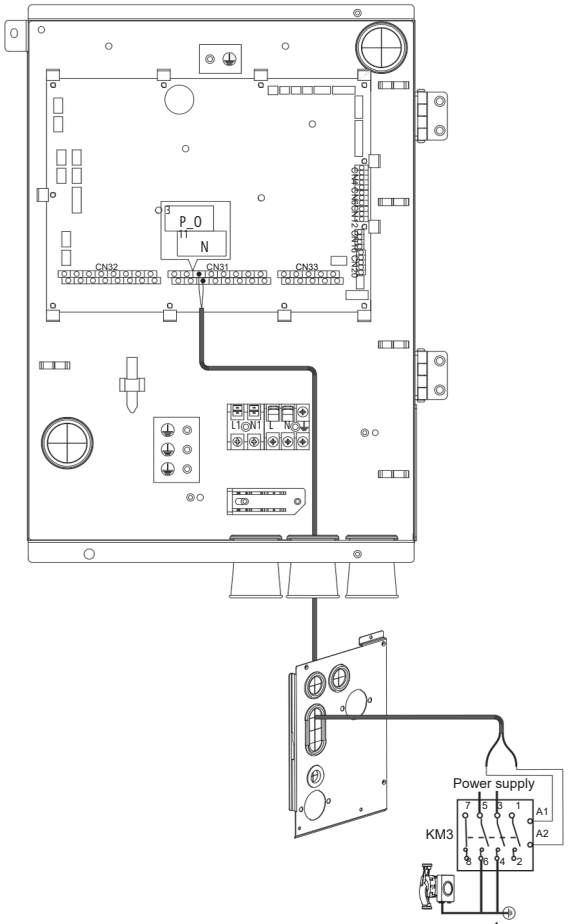

1 zone
Water pump (P_O)

5) For 2 Zone Pump (P_M)

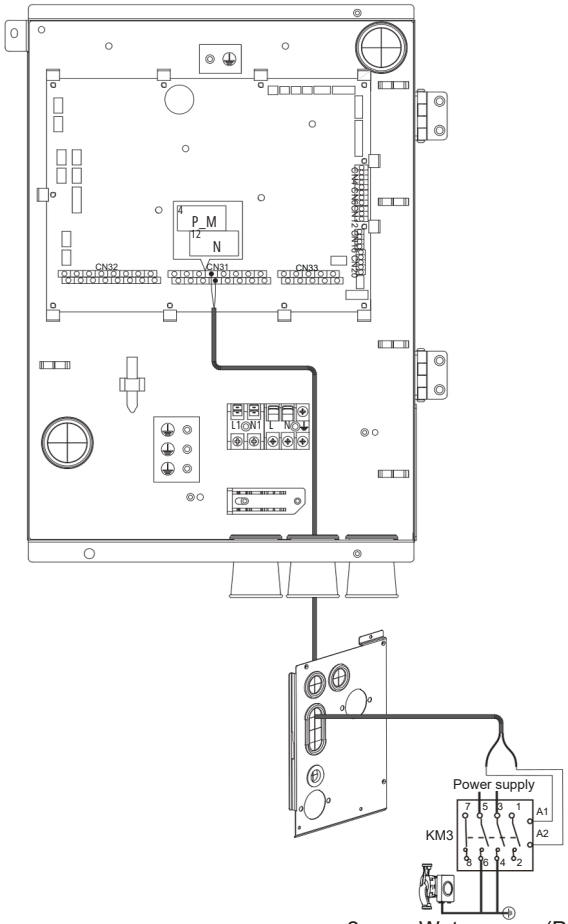

2 zone Water pump (P_M)

6) For 3 Zone Pump (P_T)

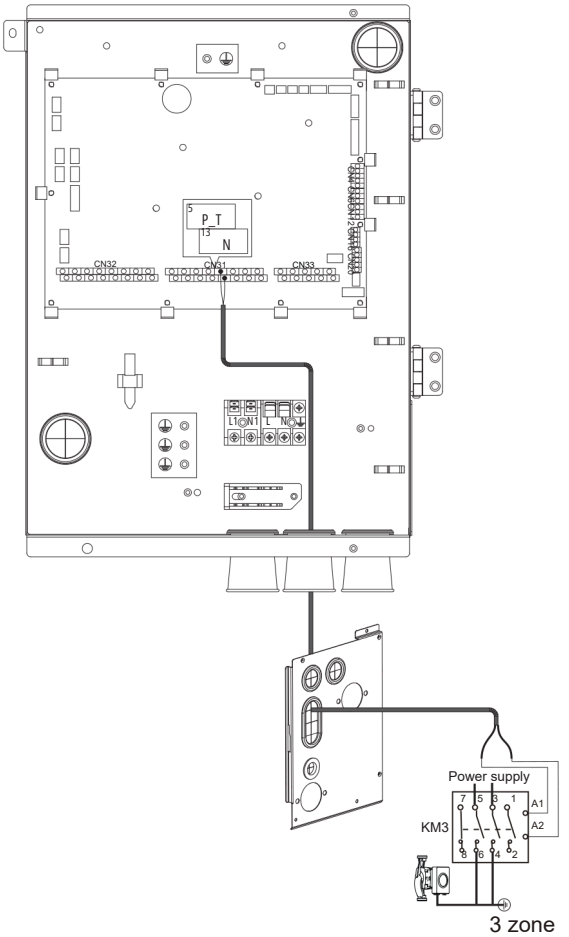

3 zone
Water pump (P_T)

7) For Solar Water Pump (P_S)

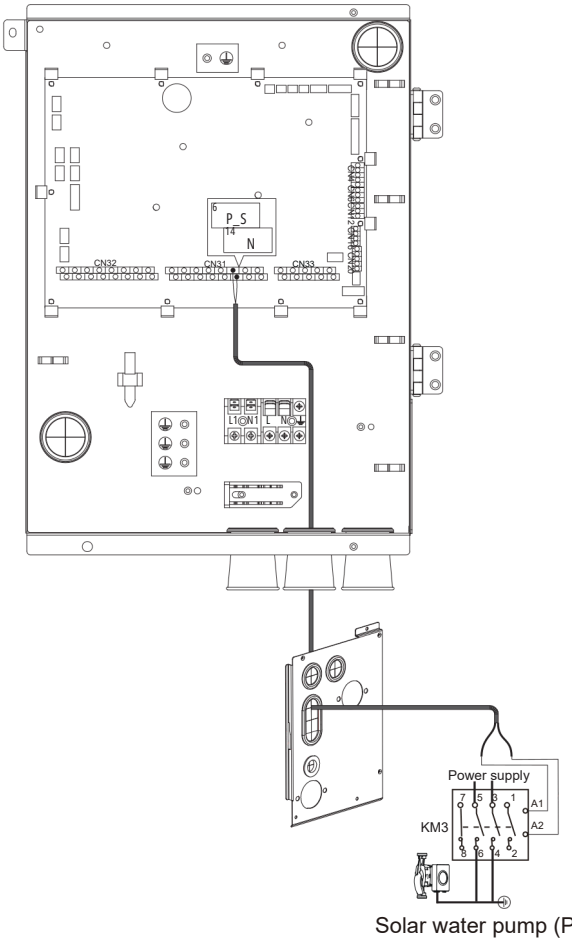

Solar water pump (P_S)

8) For domestic Water Pump (P_R)

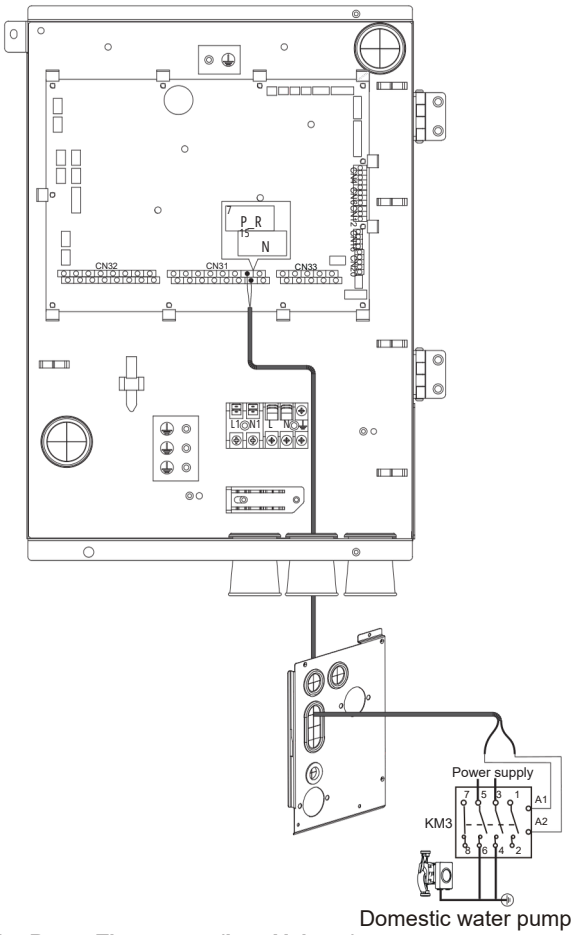

Domestic water pump (P_R)

9) For Room Thermostat (Low Voltage)

Zone 1

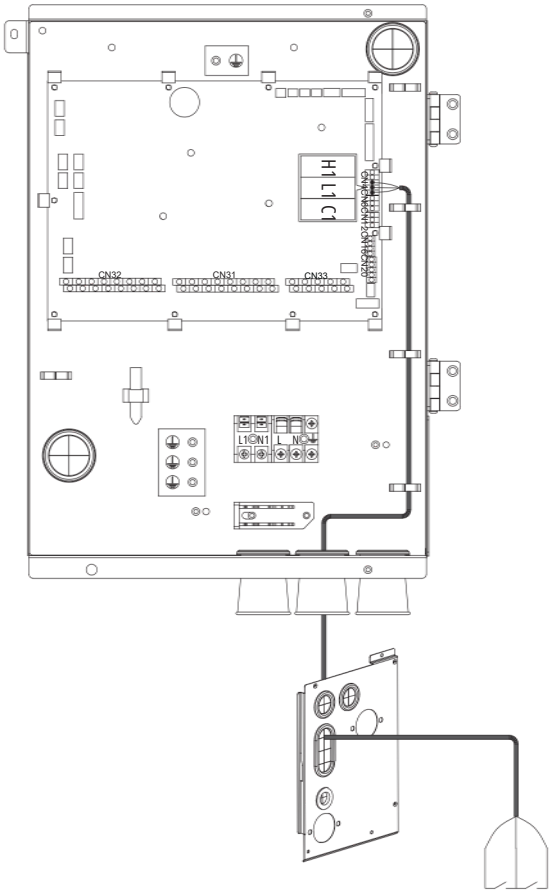

Zone 1 Thermostat
Cooling (C1) Common (L1) Heating (H1)

Zone 2

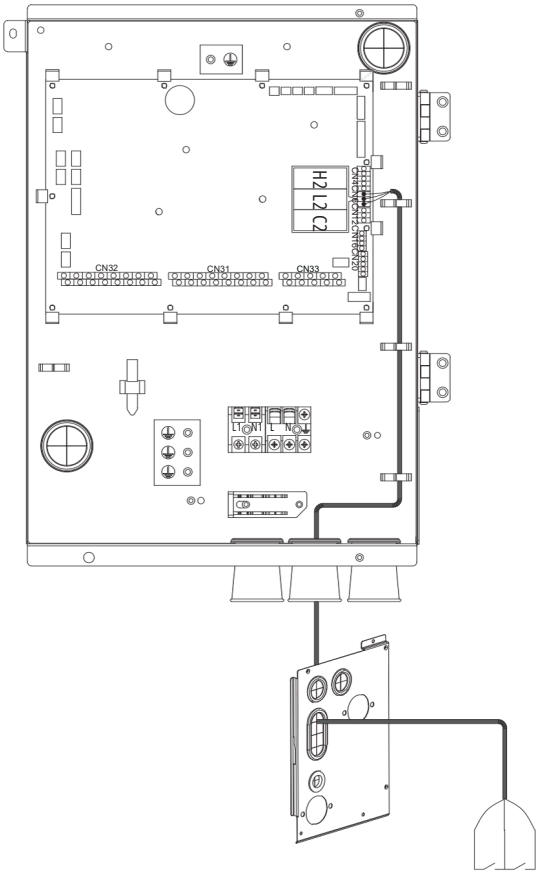

Zone 2 Thermostat
Cooling (C2)
Common (L2)
Heating (H2)

Zone 3

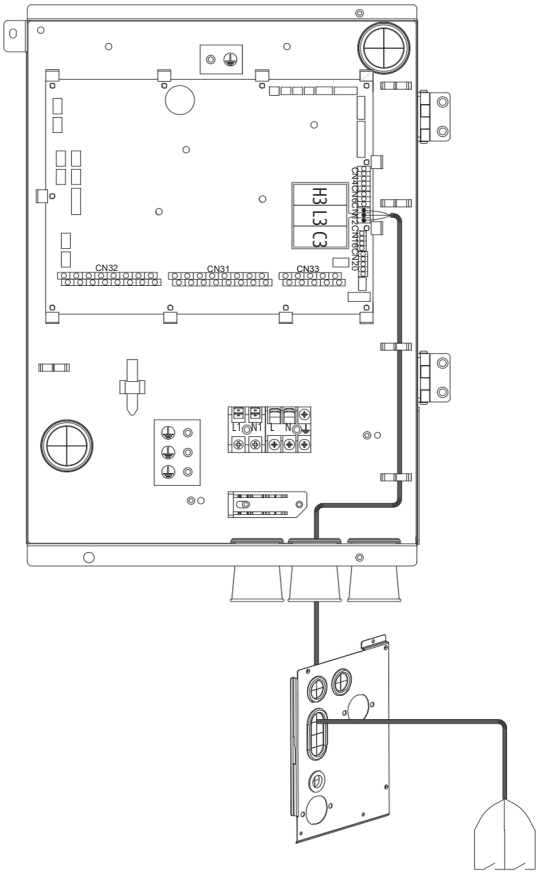

Zone 3 Thermostat
Cooling (C3) Common (L3) Heating (H3)

10) For Water Tank Electric Heating

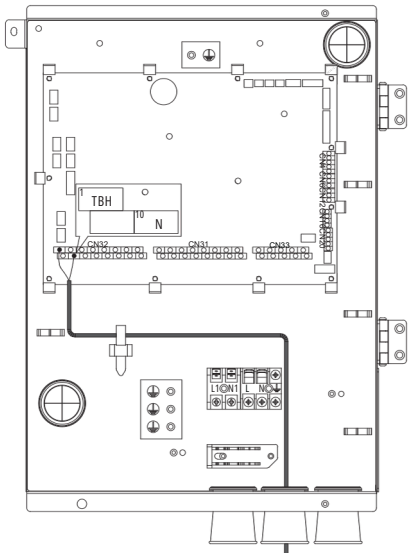

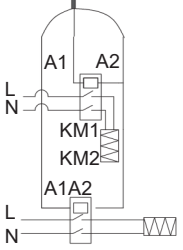

Water tank electric heating output

WARNING

The unit only sends an ON/OFF signal to the heater.

11) For Pipe Electric Heating

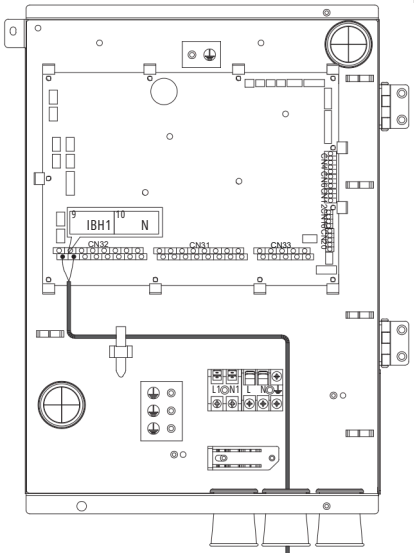

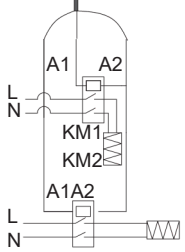

Pipe electric heating output

12) For Auxiliary Heat Source Control

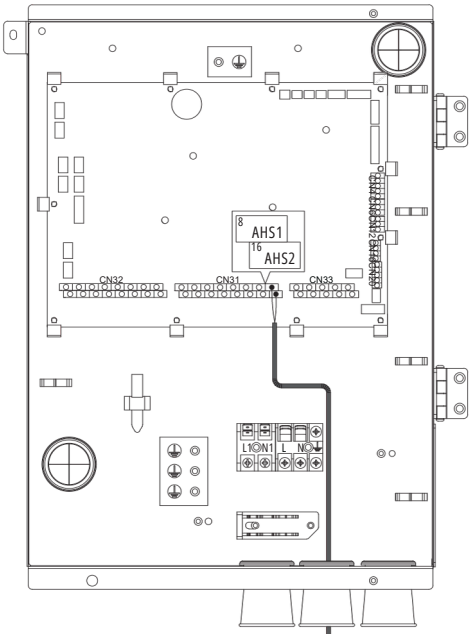

Auxiliary heat source

13) For Cascade Comm-port

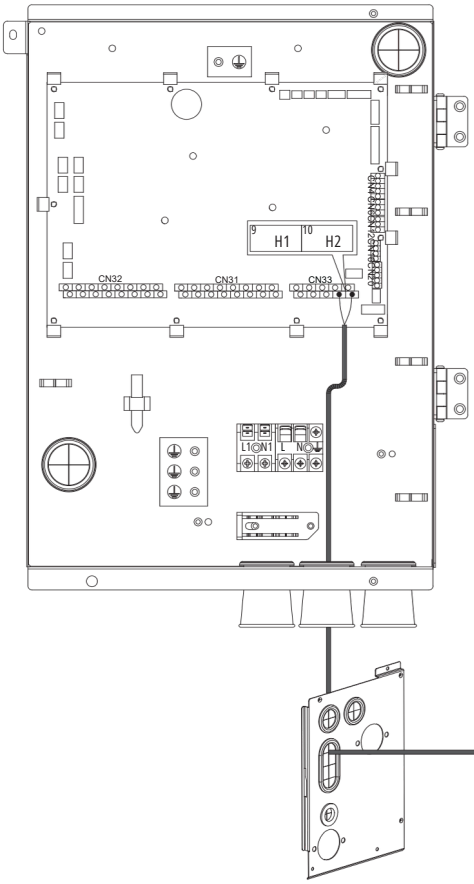

H1H2
Cascade comm-port

14) For MODBUS Expansion Board Comm-port

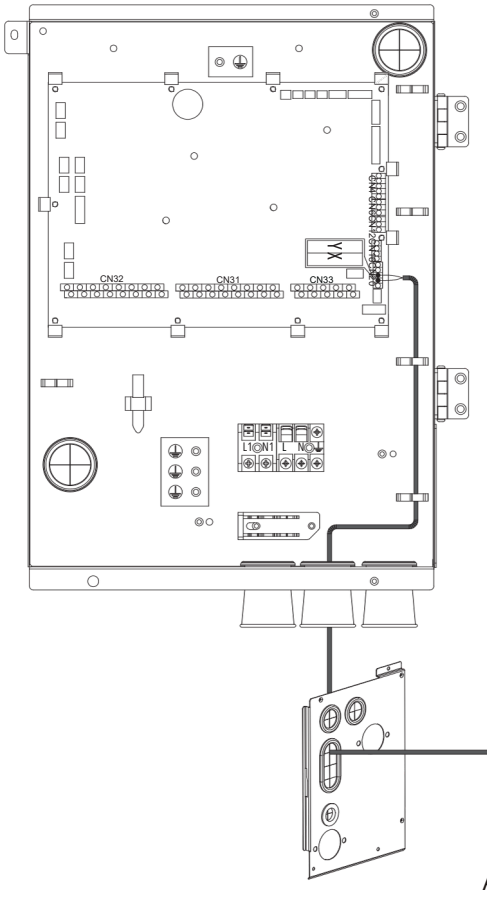

A (Y)B (X)

MODBUS Expansion board comm-port

15) For Remote Switch

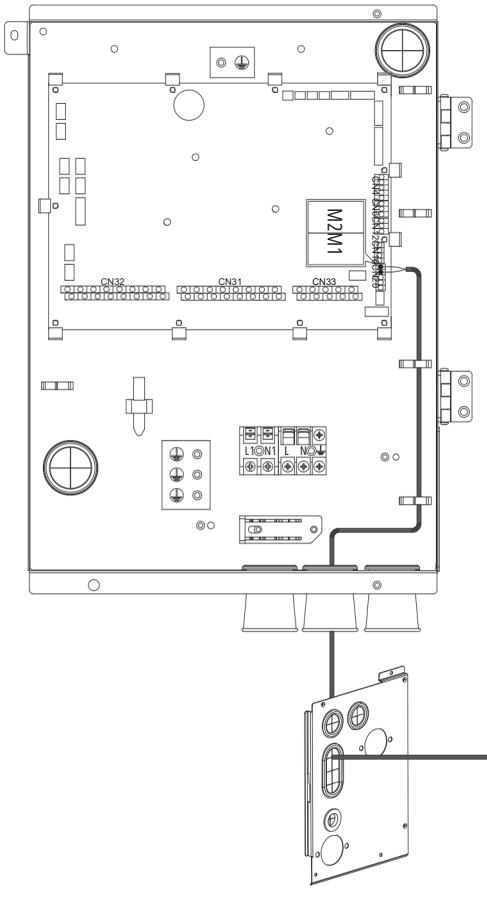

Remote switch

16) For Solar Energy

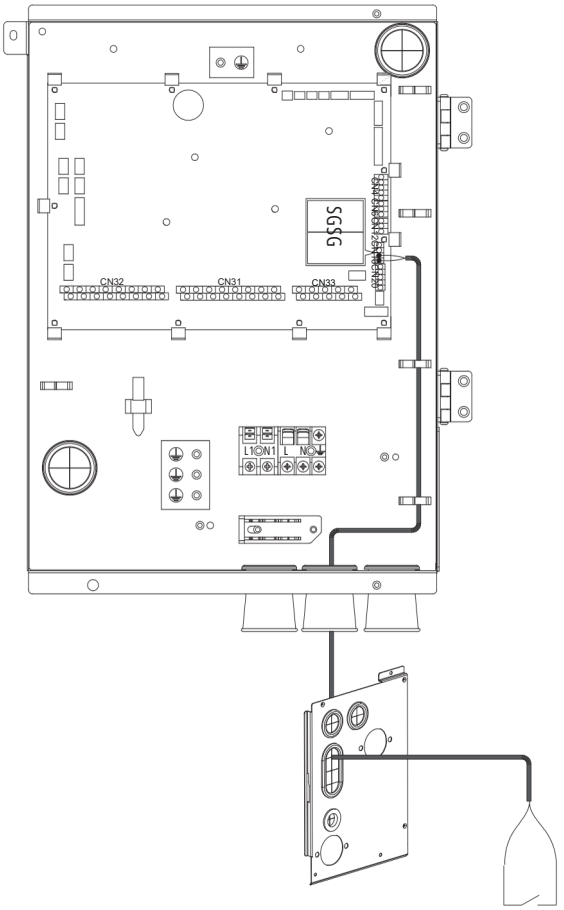

Solar energy

17) For Commercial Power

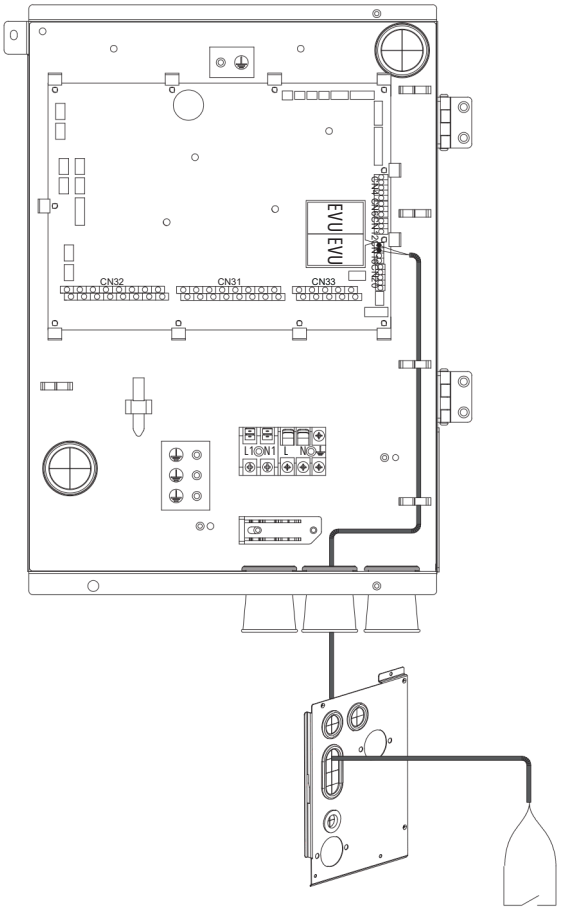

Commerial power

1. When EVU signal is on, and SG signal is on, as long as the DHW mode is set to be valid, heat pump will operate DHW mode priority and the DHW mode setting temperature will be changed to 70 °C. Thwt < 69 °C, the TBH is on, Thwt ≥ 70 °C, the TBH is off.
2. When EVU signal is off, and SG signal is on, as long as the DHW mode is set to be valid and the mode is on, heat pump will operate DHW mode priority. Thwt < Thwt (Set) -2, the TBH is on, Thwt ≥ Thwt (Set) +3, the TBH is off.
3. When EVU signal is off, and SG signal is off, the unit operates normally.
4. When EVU signal is on, and SG signal is off, the unit operates as below: The unit will not operate DHW mode, and the TBH is invalid,disinfection function isinvalid. The max running time for cooling/heating is “SG RUNNING TIME”, then unit will be off.

7 Test Run And Final Checks

Theinstallerisobligedtoverifycorrectoperationofunitafter installation.

7.1 Final Checks

Before switchingontheunit, read following recommendations:

- When the complete installation and all necessary settings have been carried out, close all front panels of the unit and refit the unit cover.
- The servicepanel of the switch box may only be opened by a licensed electrician for maintenance purposes.

NOTE

Duringthefirst running period of the unit, required power input may be higher than stated on the nameplate of the unit. This phenomenon originates from the compressor that needs elapse of a 50 hours run in period before reaching smooth operation and stable power consumption.

7.2 Test Run Operation (Manually)

Ifrequired, theinstallercan perform amanualtest run operation at any time to check correct operation of air purge, heating, cooling and domestic water heating.

8 Maintenance And Service

Inorder to ensure optimal availability of the unit, a number of checks and inspections on the unit and the field wiring have to be carried out at regular intervals.
This maintenance needs to be carried out by your local technician.
In order to ensure optimal availability of the unit, a number of checks and inspections on the unit and the field wiring have to be carried out at regular intervals.
This maintenance has to be carried out by your local technician.

⚠ WARNING

ELECTRIC SHOCK

- Before carrying out any maintenance or repairing activity, must switch off the power supply on the supply panel.
- Do not touch any live part for 10 minutes after the power supply is turned off.
- Please note that some sections of the electric component box are hot.
- Do not touch any conductive parts.
- Do not rinse the unit. It may cause electric shock or fire.
- Do not leave the unit unattended when service panel is removed.

The following checks must be performed at least once per year by qualified person.

Water Pressure

Check the water pressure, if it is below 1 bar. Fill water to the system.

Water Filter

Clean the water filter of the Y-type strainer.

Safety Valve

Check for correct operation of the safety valve by turning the knob.
- If you do not hear a clacking sound, contact your local dealer.
- In case the water keeps running out of the unit, close both the water inlet and outlet shut-off valves first and then contact your loyal dealer.

Drainage Hose

Check that the drainage hose is positioned appropriately to drain the water.

Backup HeaterVesselInsulationCover

Check that the backup heater insulation cover is fastened tightly around the backup heater vessel.
Domestic hot water tank pressure relief valve (field supply). Applies only to installations with a domestic hot water tank. Check for correct operation of the pressure relief valve on the domestic hot water tank.

9 Turn Over To Customer

Theowner'smanualofmonoblocmustbeturnedover to the customer. Explain the contents in the owner’s manual to the customers in details.

⚠WARNING

- Ask your dealer for installation of the heat pump.
  Incomplete installation performed by yourself may result in a water leakage, electric shock, and fire.
- Ask your dealer for improvement, repair, and maintenance.
  Incomplete improvement, repair, and maintenance may result in a water leakage, electric shock, and fire.
- In order to avoid electric shock, fire or injury, or if you detect any abnormality such as smell of fire, turn off the power supply and call your dealer for instructions.
- Never let the monobloc or the remote controller get wet. It may cause an electric shock or a fire.
- Never press the button of the remote controller with a hard, pointed object. The remote controller may be damaged.
- Never replace a fuse with that of wrong rated current or other wires when a fuse blows out. Use of wire or copper wire may cause the unit to break down or cause a fire.
- It is not good for your health to expose your body to the air flow for a long time.
- Do not insert fingers, rods or other objects into the air inlet or outlet. When the fan is rotating at high speed, it will cause injury.
- Never use a flammable spray such as hair spray, lacquer or paint near the unit. It may cause a fire.
  Never put any objects into the air inlet or outlet. Objects touching the fan at high speed can be dangerous.
- Do not dispose of this product as unsorted municipal waste. Collection of such waste separately for special treatment is necessary. Do not dispose of electrical appliances as unsorted municipal waste, use separate collection facilities.
  Contact your local government for information regarding the connection systems available.
  If electrical appliances are disposed of in landfills or dumps, hazardous substances can leak into the ground water and get into the food chain, damaging your health and well-being.
- To prevent refrigerant leak, contact your dealer. When the system is installed and runs in a small room, it is required to keep the concentration of the refrigerant, if by any chance coming out, below the limit. Otherwise, oxygen in the room may be affected, resulting in a serious accident.
- The refrigerant in the heat pump is safe and normally does not leak. If the refrigerant leaks in the room, contact with a fire of a burner, a heater or a cooker may result in a harmful gas.
  Turn off any combustible heating devices, ventilate the room, and contact the dealer where you purchased the unit. Do not use the heat pump until a service person confirms that the portion where the refrigerant leaks is repaired.

⚠CAUTION

- Do not use the heat pump for other purposes. In order to avoid any quality deterioration, do not use the unit for cooling precision instruments, food, plants, animals or works of art.
- Before cleaning, be sure to stop the operation, turn the breaker off or pull out the supply cord. Otherwise, an electric shock and injury may result.
- In order to avoid electric shock or fire, make sure that an earth leak detector is installed. Be sure the heat pump is grounded.
  In order to avoid electric shock, make sure that the unit is grounded and that the earth wire is not connected to gas or water pipe, lightning conductor or telephone earth wire.
- In order to avoid injury, do not remove the fan guard of the monobloc.
- Do not operate the heat pump with a wet hand. An electric shock may happen.
- Do not touch the heat exchanger fins. These fins are sharp and could result in cutting injuries.
- After a long use, check the unit stand and fitting for damage. If damaged, the unit may fall and result in injury.
- To avoid oxygen deficiency, ventilate the room sufficiently if equipment with burner is used together with the heat pump.
- Arrange the drain hose to ensure smooth drainage. Incomplete drainage may cause wetting of the building, furniture etc.
- Never touch the internal parts of the controller. Do not remove the front panel. Some parts inside are dangerous to touch, and a machine trouble may happen.
- Never do the maintenance work by yourself. Please contact your local dealer to do the maintenances work.

CAUTION

- Never expose little children, plants or animals directly to the air flow. Adverse influence to little children, animals and plants may occur.
- Do not allow a child to mount on the monobloc or avoid placing any object on it. Falling or tumbling may result in injury.
- Do not operate the heat pump when using a room fumigation-type insecticide. Failure to observe could cause the chemicals to become deposited in the unit, which could endanger the health of those who are hypersensitive to chemicals.
- Do not place appliances which produce open fire in places exposed to the air flow from the unit . It may cause incomplete combustion or deformation of the unit due to the heat.
- Do not install the heat pump at any place where flammable gas may leak out. If the gas leaks out and stays around the heat pump, a fire may break out.
- The appliance is not intended for use by young children or infirm persons without supervision. Young children should be supervised to ensure that they do not play with the appliance.
- The monobloc window-shades should be periodic cleaning in case of being jammed. This window-shapes is heat dissipation outlet of components, if being jammed will cause the components to shorten their service life spans because of overheated for a long time.
- The temperature of refrigerant circuit will be high, please keep the interconnection cable away from the copper tube.

10 Operation And Performance

10.1 Protection Equipment

This Protection Equipment will enable the Heat Pump to stop when the Heat Pump is to be directed forced operation.
The protection equipment may be activated in following conditions:

Cooling Operation

- The air inlet or air outlet of monobloc is blocked.
- Strong wind is Continuously blowing to the air outlet of the monobloc unit.

Heating Operation

- Too much rubbish adhere to the filter in the water system.
- The air outlet of monobloc is choked.
- Mishandling in operation:

  If mishandling happens because of lightning or mobile wireless, please shut off the manual power switch, and turn on again, then push the ON/OFF button.

NOTE

When the protection equipment starts, please shut down the manual power switch, and restart operation after problem is solved.

10.2 About Power Cut

If power is cut during operation, stop all the operation immediately in case power is restored. If the auto-restart function is set on,then the unit will auto-restart.

10.3 Heating Capacity

- The heating operation is a heat-pump process that heat will be absorbed from outdoor air and released to indoor water. Once the outdoor temperature is decreased, heating capacity decreased correspondingly.
- Other heating equipment is suggested to be used together when outdoor temperature is too low.
- In some extreme cold upland that buy the monobloc equipped with electrical heater will obtain better performance.

NOTE

1) Thefan motor will continue running 60 seconds to remove residual heat when the monobloc receiving OFF command during heating operation.
2) If the heat pump malfunction occurs because of disturbance, please reconnect the heat pump to power, then turn on it again.

10.4 Compressor Protection Feature

Aprotectionfeaturepreventstheheatpumpfrombeing activated for approximately several minutes when it restarts immediately after operation.

10.5 Cooling And Heating Operation

The monoblocin thesamesystem can notrun cooling and heating at the same time.
If the Heat Pump Administrator has set running mode, then the heat pump can not run on modes other than the preset.
Standby or No Priority will be displayed in the Control Panel.

10.6 Features Of Heating Operation

Water willnotbecome hot immediatelyat thebeginning of the heating operation, 3 ~ 5 minutes ago (depends on the indoor and outdoor temperature), until the indoor heat exchanger become hot, then becomes hot.
During operation, the fan motor in the monobloc unit may stop running under high temperature.

10.7 Defrost In The Heating Operation

During heating operation, monobloc unit sometimes will frost. To increase efficiency, the unit will start defrosting automatically (about 2 ~ 10 minutes), and then water will be drained out from monobloc unit.
During defrosting, the fan motors in the monobloc will stop running.

11 Error Codes

When a safety deviceis activated, an error code will be displayed on the user interface. A list of all errors and corrective actions can be found In the table below.

Reset the safety by turning the unit OFF and back ON.

In case this procedure for resetting the safety is not successful, contact your local dealer.

Err Code	Malfunction Or Protection	Solution
d1	Abnormal outlet water temperature after auxiliary heating	1.Check the resistance of the sensor. 2.The sensor connector is loose. Reconnect it. 3.The sensor connector is wet or there is water in. Remove the water, make the connector dry. Add waterproof adhesive 4.The sensor failure, change to a new sensor.
d2	Abnormal temperature of plate heat exchange inlet water	1.Check the resistance of the sensor. 2.The sensor connector is loose. Reconnect it. 3.The sensor connector is wet or there is water in. Remove the water, make the connector dry. Add waterproof adhesive. 4.The sensor failure, change to a new sensor.
d3	Abnormal temperature of plate heat exchange outlet water	1.Check the resistance of the sensor. 2.The sensor connector is loose. Reconnect it. 3.The sensor connector is wet or there is water in. Remove the water, make the connector dry. Add waterproof adhesive 4.The sensor failure, change to a new sensor.
d4	Plate heat exchanger refrigerant gas pipe is abnormal	1.Check the resistance of the sensor. 2.The sensor connector is loose. Reconnect it. 3.The sensor connector is wet or there is water in. Remove the water, make the connector dry. Add waterproof adhesive 4.The sensor failure, change to a new sensor.
d5	Plate heat exchanger refrigerant liquid pipe is abnormal	1.Check the resistance of the sensor. 2.The sensor connector is loose. Reconnect it. 3.The sensor connector is wet or there is water in. Remove the water, make the connector dry. Add waterproof adhesive. 4.The sensor failure, change to a new sensor.
d6	Abnormal final outlet water temperature of the system	1.Check the resistance of the sensor. 2.The sensor connector is loose. Reconnect it. 3. The sensor failure,change to a new sensor or change a new interface.
d7	Zone 1 inlet water temperature abnormal	1.Check the resistance of the sensor. 2.The sensor connector is loose. Reconnect it. 3.The sensor failure, change to a new sensor or change a new interface.
d8	Zone 2 inlet water temperature abnormal	1.Check the resistance of the sensor. 2.The sensor connector is loose. Reconnect it. 3.The sensor failure, change to a new sensor or change a new interface.
d9	Zone 3 inlet water temperature abnormal	1.Check the resistance of the sensor. 2.The sensor connector is loose. Reconnect it. 3.The sensor failure, change to a new sensor or change a new interface.
dA	Zone 1 room t emperature a bnormal	1.Check the resistance of the sensor. 2.The sensor connector is loose. Reconnect it. 3.The sensor failure, change to a new sensor or change a new interface.
db	Zone 2 room t emperature a bnormal	1.Check the resistance of the sensor. 2.The sensor connector is loose. Reconnect it. 3.The sensor failure,change to a new sensor or change a new interface.
dC	Zone 3 room t emperature a bnormal	1.Check the resistance of the sensor. 2.The sensor connector is loose. Reconnect it. 3.The sensor failure,change to a new sensor or change a new interface.

Err Code	Malfunction Or Protection	Solution
dF	Balance tank upper water temperature abnormal	1.Check the resistance of the sensor. 2.The sensor connector is loose. Reconnect it. 3.The sensor connector is wet or there is water in. Remove the water, make the connector dry. Add waterproof adhesive. 4.The sensor failure, change to a new sensor.
dH	Balance tank lower water temperature abnormal	1.Check the resistance of the sensor. 2.The sensor connector is loose. Reconnect it. 3.The sensor connector is wet or there is water in. Remove the water, make the connector dry. Add waterproof adhesive. 4.The sensor failure, change to a new sensor.
dj	Abno rmal tempera ture of solar panel	1.Check the resistance of the sensor. 2.The sensor connector is loose. Reconnect it. 3.The sensor connector is wet or there is water in. Remove the water, make the connector dry. Add waterproof adhesive. 4.The sensor failure, change to a new sensor.
dn	Abnormal water tank temperature	1.Check the resistance of the sensor. 2.The sensor connector is loose. Reconnect it. 3.The sensor connector is wet or there is water in. Remove the water, make the connector dry. Add waterproof adhesive. 4.The sensor failure, change to a new sensor. 5.If you want to close the domestic water heating when sensor do not connected to the system, then sensor can not be detected.
L1	The water temperature difference between plate heat exchanger inlet and outlet is too large	1.Check that all shut off valves of the water circuit are completely open. 2.Check if the water filter needs cleaning. 3.Connect the water supply to the filling valves and open the valve. Filling with some water until the manometer indicates a pressure of approximately 2.0 bar. 4.Make sure there is no air in the system (purge air). 5.Check on the manometer that there is sufficient water pressure. The water pressure must be > 1 bar (water is cold). 6.Check that the pump speed setting is on the highest speed. 7.Make sure that the expansion vessel is not broken. 8.Check that the resistance in the water circuit is not too high for the pump.
L2	The water temperature difference between plate heat exchanger inlet and outlet is abnormal	1.Check that all shut off valves of the water circuit are completely open. 2.Check if the water filter needs cleaning. 3.Connect the water supply to the filling valves and open the valve. Filling with some water until the manometer indicates a pressure of approximately 2.0 bar. 4.Make sure there is no air in the system (purge air). 5.Check on the manometer that there is sufficient water pressure. The water pressure must be > 1 bar (water is cold). 6.Check that the pump speed setting is on the highest speed. 7.Make sure that the expansion vessel is not broken. 8.Check that the resistance in the water circuit is not too high for the pump.
L3	Plate heat exchanger outlet water temperature is too low	1.Check the resistance of temperature sensor. 2.The sensor connector is loose. Reconnect it. 3.The sensor failure, change to a new sensor. 4.Check that all shut off valves of the water circuit are completely open. 5.Check if the water filter needs cleaning. 6.Insufficient water flow. 7.Detect the amount of refrigerant.
L4	Plate heat exchanger outlet water temperature is too high	1.Check the resistance of temperature sensor. 2.The sensor connector is loose. Reconnect it. 3.The sensor failure, change to a new sensor. 4.Check that all shut off valves of the water circuit are completely open. 5.Check if the water filter needs cleaning. 6.Insufficient water flow. 7.Detect the amount of refrigerant.
L5	Plate heat exchanger inlet water temperature is too low	1.Check the inlet water temperature. 2.Check the resistance of temperature sensor. 3.The sensor connector is loose. Reconnect it. 4.The sensor failure, change to a new sensor.
L6	Plate heat exchanger inlet water temperature is too high	1.Check the inlet water temperature 2.Check the resistance of temperature sensor 3.The sensor connector is loose. Reconnect it. 4.The sensor failure, change to a new sensor.
L7	Water side antifreeze	1.Check the resistance of the two sensors. 2.Check the two sensors locations . 3.The water sensor is loosen. Reconnect it. 4.The water sensor is broken, change to a new sensor. 5.Four-way valve is blocked. Restart the unit again to let the valve change the direction. 6.Four-way valve is broken, change a new valve.

Err Code	Malfunction Or Protection	Solution
L8	Insufficient water flow fault	1.Check whether the water flow switch is installed loosely. 2.Check that all shut off valves of the water circuit are completely open. 3.Check if the water filter needs cleaning. 4.Connect the water supply to the filling valves and open the valve. Filling with some water until the manometer indicates a pressure of approximately 2.0 bar. 5.Make sure there is no air in the system (purge air). 6.Check on the manometer that there is sufficient water pressure. The water pressure must be > 1 bar (water is cold). 7.Check that the pump speed setting is on the highest speed. 8.Make sure that the expansion vessel is not broken. 9.Check that the resistance in the water circuit is not too high for the pump. 10.If this error occurs at defrost operation (during space heating or domestic water heating), make sure that the backup heater power supply is wired correctly and that fuses are not blown. 11.Check that the pump fuse and PCB fuse are not blown.
Lb	Auxiliary electric heating feedback failure	1.Interface wiring disconnected. 2.There is no water in the water tank when the auxiliary electric heating is started. 3.Check whether the temperature controller is reset, it can be reset manually.
LC	Water tank electric heating feedback failure	1.Interface wiring disconnected. 2.There is no water in the water tank when the electric heating is started.
LP	Main water pump failure	1.Poor connection of water pump wiring. 2.The water pump has failed, change a new water pump.
C1	Multiple master control failure	1.When an internal machine is connected with two line controllers, if both line controllers are set as main line controllers, report to C1. 2.Solution: One wired controller is set as the master and the other wired controller is set as the slave.
C7	WiFi communication failure	Replace the wired controller.
E0	Communication failure between indoor unit and outdoor unit	1.Check whether the communication wire is properly connected and in good contact. 2.Whether there is a high magnetic field or high power. interfere, such as lifts, large power transformers, etc. To add a barrier to protect the unit or to move the unit to the other place.
E3	Coil temperature sensor fault	1.Check the temperature of the coolant tube. 2.Check the resistance of the temperature sensor. 3.The sensor connector is loose. Reconnect. 4.If the sensor is faulty, replace it with a new one.
E4	Refrigerant leakage fault	1.Check whether the refrigerant has leaked.
E5	DIP abnormal	1.Check whether the dip switch of the model is normal. 2.Check whether the cascaded models are consistent.
E7	Outdoor temperature sensor failure	Check whether the temperature sensor is normal.
E8	Discharge temperature sensor failure	Check whether the temperature sensor is normal.
Eb	Communication failure between indoor unit and wired controller	1.Check whether there is any abnormality in the connecting line between the line controller and the electric control board, and replace the connecting line. 2.If the wired controller is abnormal, replace it. 3.If the electric control board is abnormal, replace it.

Err Code	Malfunction Or Protection	Solution
EC	Communication failure between drive board and main PCB	1.Check whether the power supply of the monobloc is correct. 2.Check whether the communication line between monobloc is connected correctly.
Ed	Indoor EEPROM failure	1. Initialize all parameters. 2. main control board of monobloc is broken, change a new PCB.
EE	Outdoor EEPROM failure	1. Initialize all parameters. 2. Main control board of monobloc is broken, change a new PCB.
EF	Outdoor DC fan failure	1.Strong wind or typhoon below toward to the fan, to make the fan running in the opposite direction. Change the unit direction or make shelter to avoid typhoon below to the fan. 2. Check whether the PWM fan wiring is normal. 3.Fan motor is broken, change a new fan motor.
EH	Suction temperature sensor failure	Check whether the communication wire is properly connected and in good contact.
En	Module communication fault	1. Check the wiring method of cascade function. 2. Check the dialing code of cascade address.
F2	Outdoor discharge temperature sensor failure protection	1.Check the resistance of the sensor. 2.The sensor connector is loose. Reconnect it. 3.The sensor connector is wet or there is water in. Remove the water, make the connector dry. Add waterproof adhesive. 4.The sensor failure, change to a new sensor.
F3	Outdoor coil temperature sensor failure protection	Check whether the temperature sensor is normal.
F5	PFC protection	1.Check fan, air duct and ambient temperature. 2.Extend acceleration time. 3.Check compressor model and model parameters. 4.Check the input voltage. 5.Please power off for a few minutes, then power on again and start again. 6.Check whether the PFC inductor lead wire or inductor coil is. short-circuited, or seek service. 7.Check mechanical system, compressor refrigerant, etc., or seek service.
F6	Compressor loss/reverse phase protection	1.Check the installation wiring. 2.Check the input voltage. 3. Adjust parameters to eliminate oscillation.
F7	Module temperature protection	Power off and then power on and try again, if the problem still exists, please seek service.
F8	4 way valve reversing failure (heating mode)	1.Whether the wiring of the four-way valve is correct. 2.Whether the power supply voltage of the monobloc is too low, resulting in abnormal reversing of the 4-way valve. 3.If the fault still cannot be solved, consult the manufacturer.
FA	Compressor phase current detection failure	Power off and then power on and try again, if the problem still exists, please seek service.
Fy	Lack of refrigerant	Check whether the unit leaks refrigerant. If there is leakage, the leak point needs to be repaired.

Err Code	Malfunction Or Protection	Solution
H1	High pressure protection	Check whether compressor high pressure switch is normal. Heating mode, DHW mode: 1.The water flow is low; water temp is high, whether there is air in the water system. Release the air. 2.Water pressure is lower than 0.1 MPa, charge the water to let the pressure in the range of 0.15 ~ 0.2 MPa. 3.Over charge the refrigerant volume. Recharge the refrigerant in right volume. 4.Electrical expansion valve locked or winding connector is loose. Tap-tap the valve body and plug in/ plug off the connector for several times to make sure the valve is working correctly. And install the winding in the right location DHW mode: Water tank heat exchanger is smaller . Cooling mode: 1. The finned heat exchanger cover is not removed. Remove it. 2. The finned heat exchanger is dirty or something is blocked on the surface. Clean the heat exchanger or remove the obstruction.
H2	Low pressure protection	1.Check whether compressor low pressure switch is normal. 2.Lack of refrigerant. Charge the refrigerant in right volume. 3. When at heating mode or DHW mode, the finned heat exchanger is dirty or something is blocked on the surface. Clean the finned heat exchanger or remove the obstruction. 4.The water flow is too low in cooling mode. Increase the water flow. 5.Electrical expansion valve locked or winding connector is loose. Tap-tap the valve body and plug in/ plug off the connector for several times to make sure the valve is working correctly.
H3	High pressure sensor failure	1.Check whether the sensor is connected properly. 2.Pressure sensor failure, change to a new sensor.
P0	IPM module protection	1.The IPM module is damaged. 2.The IPM module and heat sink are improperly installed.
P1	Overvoltage protection	1.Check input power supply, wiring. 2.Check input voltage. 3.Check and replace.
P2	AC input overcurrent	1.Check whether the working load of the unit is out of range. 2.Check whether there are foreign bodies in the inlet and outlet of the external machine. 3.Check whether the system is blocked.
P4	Discharge temperature too high protection	1.Check the resistance of the sensor. 2.The sensor connector is loose. Reconnect it. 3.The sensor connector is wet or there is water in. Remove the water, make the connector dry. Add waterproof adhesive. 4.The sensor failure, change to a new sensor. 5.Check for lack of refrigerant.
P5	Refrigeration anti-overcooling failure	Whether the water flow is sufficient during heating, and whether the Y-shaped filter is dirty and blocked, resulting in insufficient water flow.
P6	Refrigeration anti-overheating failure	Check whether the fin heat exchanger of the monobloc dissipates heat well during cooling, and whether the condenser is dirty or blocked.
P7	Heating protection against overheating	Whether the water flow is sufficient during heating, and whether the Y-shaped filter is dirty and blocked, resulting in insufficient water flow.
P8	Outdoor ambient temperature too high or too low protection	Am bient temperature is too low or too high.

12 Technical Specifications

Unit Model	4 kW	4 kW (3 kW heater)	6 kW	6 kW (3 kW heater)
Power Supply	220 - 240 V 1 N ~ 50 Hz			
Rated Power Input	2200 W	2200 W + 3000 W	2600 W	2600 W + 3000 W
Rated Current	12.5 A	12.5 A + 14 A	12.5 A	12.5 A + 14 A
Nominal Capacity	Refer to the technical data			
Dimensions(W × H × D) [mm]	1293 × 860 × 523			
Packing(W×H × D) [mm]	1395 × 996 × 550			
Fan Motor	DC motor / Horizontal			
Compressor	DC inverter dual rotary			
Heat Exchanger	Fin-coil			
Water Side Heat Exchanger	Plate heat exchanger			
Rated Water Pressure	0.3 MPa			
Filter Mesh	80			
Min. Water Flow (Flow Switch)	6 L/min			
Refrigerant				
Type	R290			
Quality	800 g			
Pump				
Type	DC inverter			
Max. Head	9 m			
Power Input	5 ~ 90 W			
Expansion Vessel				
Volume	5 L			
Max. Operating Pressure	0.3 MPa (g)			
Pre-charge Pressure	0.1 MPa (g)			

Weight				
Net Weight	107 kg	109 kg	107 kg	109 kg
Gross Weight	128 kg	130 kg	128 kg	130 kg
Connections				
Water Inlet/Outlet	R5/4"			
Operation Ambient Temperature Range				
Cooling Mode	-5 ~ 46 °C			
Heating Mode	-25 ~ 35 °C			
Domestic Hot Water Mode	-25 ~ 43 °C			
Water Outlet Temperature Range				
Outlet Water (Cooling Model)	5 ~ 20 °C			
Outlet Water (Heating Model)	25 ~ 80 °C			
Domestic Hot Water	20 ~ 70 °C			
Water Pressure	0.1 ~ 0.3 MPa			
The Temperature Range Of Wired Controller Using				
Storage Temperature	-10 ~ 60 °C			
Operating Temperature	-10 ~ 50 °C			

Unit Model	8 kW	8 kW (3 kW heater)	10 kW	10 kW (3 kW heater)
Power Supply	220 - 240 V 1 N ~ 50 Hz			
Rated Power Input	3800 W	3800 W + 3000 W	4100 W	4100 W + 3000 W
Rated Current	19 A	19 A + 14 A	19 A	19 A + 14 A
Nominal Capacity	Refer to the technical data			
Dimensions(W × H × D) [mm]	1336 × 1061 × 552			
Packing(W × H × D) [mm]	1410 × 1230 × 570			
Fan Motor	DC motor / Horizontal			
Compressor	DC inverter dual rotary			
Heat Exchanger	Fin-coil			
Water Side Heat Exchanger	Plate heat exchanger			
Rated Water Pressure	0.3 MPa			
Filter Mesh	80			
Min. Water Flow (Flow Switch)	6 L/min			
Refrigerant				
Type	R290			
Quality	1200 g			
Pump				
Type	DC inverter			
Max. Head	9 m			
Power Input	5 ~ 90 W			
Expansion Vessel				
Volume	8 L			
Max. Operating Pressure	0.3 MPa (g)			
Pre-charge Pressure	0.1 M Pa (g)			

Weight				
Net Weight	145 kg	147 kg	145 kg	147 kg
Gross Weight	163 kg	165 kg	163 kg	165 kg
Connections				
Water Inlet/Outlet	R5/4"			
Operation Ambient Temperature Range				
Cooling Mode	-5 ~ 46 °C			
Heating Mode	-25 ~ 35 °C			
	-25 ~ 43 °C			
Domestic Hot Water Mode				
Water Outlet Temperature Range				
Outlet Water (Cooling Model)	5 ~ 20 °C			
Outlet Water (Heating Model)	25~80 °C			
	20~70 °C			
Domestic Hot Water	0.1 ~ 0.3 MPa			
Water Pressure				
The Temperature Range Of Wired Controller Using				
Storage Temperature	-10 ~ 60 °C			
Operating Temperature	-10 ~ 50 °C			

Unit Model	12 kW	12 kW (3 kW heater)	14 kW	14 kW (3 kW heater)	16 kW	16 kW (3 kW heater)
Power Supply	220 - 240 V 1 N ~ 50 Hz					
Rated Power Input	5400 W	5400 W + 3000 W	5800 W	5800 W + 3000 W	6200 W	6200 W + 3000 W
Rated Current	29.5 A	29.5 A + 14 A	29.5 A	29.5 A + 14 A	29.5 A	29.5 A + 14 A
Nominal Capacity	Refer to the technical data					
Dimensions(W × H × D) [mm]	1336 × 1061 × 552					
Packing(W × H × D) [mm]	1410 × 1230 × 570					
Fan Motor	DC motor / Horizontal					
Compressor	DC inverter dual rotary					
Heat Exchanger	Fin-coil					
Water Side Heat Exchanger	Plate heat exchanger					
Rated Water Pressure	0.3 MPa					
Filter Mesh	80					
Min. Water Flow (Flow Switch)	13 L/min					
Refrigerant						
Type	R290					
Quality	1350 g					
Pump						
Type	DC inverter					
Max. Head	9 m					
Power Input	5 ~ 90 W					
Expansion Vessel						
Volume	8 L					
Max. Operating Pressure	0.3 MPa (g)					
Pre-charge Pressure	0.1 M Pa (g)					

Weight						
Net Weight	163	165	163	165	163	165
Gross Weight	kg	kg	kg	kg	kg	kg
Connections	188	190	188	190	188	190
Water Inlet/Outlet	kg	kg	kg	R5/4" kg	kg	kg
Operation Ambient Temperature Range						
Cooling Mode	-5 ~ 46 °C					
Heating Mode	-25 ~ 35 °C					
Domestic Hot Water Mode	-25 ~ 43 °C					
Water Outlet Temperature Range						
Outlet Water (Cooling Model)	5 ~ 20 °C					
Outlet Water (Heating Model)	25 ~ 80 °C					
Domestic Hot Water	20 ~ 70 °C					
Water Pressure	0.1 ~ 0.3 MPa					
The Temperature Range Of Wired Controller Using						
Operating Temperature	-10 ~ 60 °C					
Storage Temperature	-10 ~ 50 °C					

Unit Model	8 kW	8 kW (6 kW heater)	8 kW (9 kW heater)	10 kW	10 kW (6 kW heater)	10 kW (9 kW heater)
Power Supply	380 - 415V 3N ~ 50Hz					
Rated Power Input	3800 W	3800 W + 6000 W	3800 W + 9000 W	4100 W	4100 W + 6000 W	4100 W + 9000 W
Rated Current	11 A	11 A + 9 A	11 A + 14 A	11 A	11 A + 9 A	11 A + 14 A
Nominal Capacity	Refer to the technical data					
Dimensions(W × H × D) [mm]	1336 × 1061 × 552					
Packing(W × H × D) [mm]	1410 × 1230 × 570					
Fan Motor	DC motor / Horizontal					
Compressor	DC inverter dual rotary					
Heat Exchanger	Fin-coil					
Water Side Heat Exchanger	Plate heat exchanger					
Rated Water Pressure	0.3 MPa					
Filter Mesh	80					
Min. Water Flow (Flow Switch)	6 L/min					
Refrigerant						
Type	R290					
Quantity	1200 g					
Pump						
Type	DC inverter					
Max. Head	9 m					
Power Input	5 ~ 90 W					
Expansion Vessel						
Volume	8 L					
Max. Operating Pressure	0.3 MPa (g)					
Pre-charge Pressure	0.1 M Pa (g)					

Weight						
Net Weight	159 kg	161 kg	161 kg	159 kg	161 kg	161 kg
Gross Weight	177 kg	179 kg	177 kg	179 kg	179 kg	179 kg
Connections						
Water Inlet/Outlet	R5/4"					
Operation Ambient Temperature Range						
Cooling Mode	-5 ~ 46°C					
Heating Mode	-25 ~ 35°C					
Domestic Hot Water Mode	-25 ~ 43°C					
Water Outlet Temperature Range						
Outlet Water (Cooling Model)	5 ~ 20 °C					
Outlet Water (Heating Model)	25 ~ 80 °C					
Domestic Hot Water	20 ~ 70 °C					
Water Pressure	0.1 ~ 0.3 MPa					
The Temperature Range Of Wired Controller Using						
Storage Temperature	-10 ~ 60 °C					
Operating Temperature	-10 ~ 50 °C					

Unit Model	12 kW	12 kW (6 kW heater)	14 kW	14 kW (6 kW heater)	16 kW	16 kW (6 kW heater)
Power Supply	380 - 415 V 3 N ~ 50 Hz					
Rated Power Input	5400 W	5400 W + 6000 W	5800 W	5800 W + 6000 W	6200 W	6200 W + 6000 W
Rated Current	13 A	13 A + 9 A	13 A	13 A + 9 A	13 A	13 A + 9 A
Nominal Capacity	Refer to the technical data					
Dimensions(W × H × D) [mm]	1336 × 1061 × 552					
Packing(W × H × D) [mm]	1410 × 1230 × 570					
Fan Motor	DC motor / Horizontal					
Compressor	DC inverter dual rotary					
Heat Exchanger	Fin-coil					
Water Side Heat Exchanger	Plate heat exchanger					
Rated Water Pressure	0.3 MPa					
Filter Mesh	80					
Min. Water Flow (Flow Switch)	13 L/min					
Refrigerant						
Type	R290					
Quality	1350 g					
Pump						
Type	DC inverter					
Max. Head	9 m					
Power Input	5 ~ 90 W					
Expansion Vessel						
Volume	8 L					
Max. Operating Pressure	0.3 MPa (g)					
Pre-charge Pressure	0.1 M Pa (g)					

Weight						
Net Weight	174 kg	176 kg	174 kg	176 kg	174 kg	176 kg
Gross Weight	192 kg	194 kg	192 kg	194 kg	192 kg	194 kg
Connections						
Water Inlet/outlet	R5/4"					
Operation Ambient Temperature Range						
Cooling Mode	-5 ~ 46 °C					
Heating Mode	-25 ~ 35 °C					
Domestic Hot Water Mode	-25 ~ 43 °C					
Water Outlet Temperature Range						
Outlet Water (Cooling Model)	5 ~ 20 °C					
Outlet Water (Heating Model)	25 ~ 80 °C					
Domestic Hot Water	20 ~ 70 °C					
Water Pressure	0.1 ~ 0.3 MPa					
The Temperature Range Of Wired Controller Using						
Storage Temperature	-10 ~ 60 °C					
Operating Temperature	-10 ~ 50 °C					

Unit Model	12 kW (9 kW heater)	14 kW (9 kW heater)	16 kW (9 kW heater)
Power Supply	380 - 415 V 3 N ~ 50 Hz		
Rated Power Input	5400 W + 9000 W	5800 W + 9000 W	6200 W + 9000 W
Rated Current	13 A + 14 A	13 A + 14 A	13 A + 14 A
Nominal Capacity	Refer to the technical data		
Dimensions(W × H × D) [mm]	1336 × 1061 × 552		
Packing(W × H × D) [mm]	1410 × 1230 × 570		
Fan Motor	DC motor / Horizontal		
Compressor	DC inverter dual rotary		
Heat Exchanger	Fin-coil		
Water Side Heat Exchanger	Plate heat exchanger		
Rated Water Pressure	0.3 MPa		
Filter Mesh	80		
Min. Water Flow (Flow Switch)	13 L/min		
Refrigerant			
Type	R290		
Quality	1350 g		
Pump			
Type	DC inverter		
Max. Head	9 m		
Power Input	5 ~ 90 W		
Expansion Vessel			
Volume	8L		
Max. Operating Pressure	0.3 MPa (g)		
Pre-charge Pressure	0.1 M Pa (g)		

Weight	
Net Weight	176 kg
Gross Weight	194 kg
Connections	
Water Inlet/outlet	R5/4"
Operation Ambient Temperature Range	
Cooling Mode	-5 ~ 46 °C
Heating Mode	-25 ~ 35 °C
Domestic Hot Water Mode	-25 ~ 43 °C
Water Outlet Temperature Range	
Outlet Water (Cooling Model)	5 ~ 20 °C
Outlet Water (Heating Model)	25 ~ 80 °C
Domestic Hot Water	20 ~ 70 °C
Water Pressure	0.1 ~ 0.3 MPa
The Temperature Range Of Wired Controller Using	
Storage Temperature	-10 ~ 60 °C
Operating Temperature	-10 ~ 50 °C

13 Servicing Information

1) Checks To The Area

Priortobeginningwork on systems containing flammable refrigerants, safety checks are necessary to ensure that the risk of ignition is minimized. For repair to the refrigerating system, the following precautions shall be complied with prior to conducting work on the system.

2) Work Procedure

Works shallbeundertaken under a controlled procedure so as to minimise the risk of a flammable gas or vapour being present while the work is being performed.

3) General Work Area

Allmaintenance staff and others working in the local area shall be instructed on the nature of work being carried out, work in confined spaces shall be avoided. The area around the work space shall be sectioned off. Ensure that the conditions within the area have been made safe by control of flammable material.

4) Checking For Presence Of Refrigerant

Thearea shallbe checkedwith anappropriate refrigerant detector prior to and during work, to ensure the technician is aware of potentially flammable atmospheres. Ensure that the leak detection equipment being used is suitable for use with flammable refrigerants, i.e. no sparking, adequately sealed or intrinsically safe.

5) Presence Of Fire Extinguisher

Ifanyhot workis tobe conductedon the refrigeration equipment or any associated parts, appropriate fire extinguishing equipment shall be available to hand. Have a dry power or CO_2 fire extinguisher adjacent to the charging area.

6) No Ignition Sources

No person carrying out work in relation to a refrigeration system which involves exposing any pipe work that contains or has contained flammable refrigerant shall use any sources of ignition in such a manner that it may lead to the risk of fire or explosion.

All possible ignition sources, including cigarette smoking, should be kept sufficiently far away from the site of installation, repairing, removing and disposal, during which flammable refrigerant can possibly be released to the surrounding space. Prior to work taking place, the area around the equipment is to be surveyed to make sure that there are no flammable hazards or ignition risks. NO SMOKING signs shall be displayed.

7) Ventilated Area

Ensurethat the area is in the open or that it’s adequately ventilated before breaking into the system or conducting any hot work. A degree of ventilation shall continue during the period that the work is carried out. The ventilation should safely disperse any released refrigerant and preferably expel it externally into the atmosphere.

8) Checks To The Hvac Equipment

Where electrical componentsarebeing changed, they shall be fit for the purpose and to the correct specification. At all times the manufacturer’s maintenance and service guidelines shall be followed. If in doubt consult the manufacturer’s technical department for assistance. The following checks shall be applied to installations using flammable refrigerants:

•The charge size is in accordance with the room size within which the refrigerant containing parts are installed;

•The ventilation machinery and outlets are operating adequately and are not obstructed;

•If an indirect refrigerating circuit is being used, the secondary circuits shall be checked for the presence of refrigerant; marking to the equipment continues to be visible and legible;

•Marking and signs that are illegible shall be corrected;

•Refrigeration pipe or components are installed in a position where they are unlikely to be exposed to any substance which may corrode refrigerant containing components, unless the components are constructed of materials which are inherently resistant to being corroded or are suitably protected against being so corroded.

9) Checks To Electrical Devices

Repair andmaintenance to electrical components shall include initial safety checks and component inspection procedures. If a fault exists that could compromise safety, then no electrical supply shall be connected to the circuit until it is satisfactorily dealt with. If the fault cannot be corrected immediately but it is necessary to continue operation, and adequate temporary solution shall be used. This shall be reported to the owner of the equipment so all parties are advised.

Initial safety checks shall include:

•That capacitors are discharged: This shall be done in a safe manner to avoid possibility of sparking;

•That there are no live electrical components and wiring are exposed while charging, recovering or purging the system;

•That there is continuity of earth bonding.

10) Repairs To Sealed Components

a)During repairs to sealed components, all electrical supplies shall be disconnected from the equipment being worked upon prior to any removal of sealed covers, etc. If it is absolutely necessary to have an electrical supply to equipment during servicing, then a permanently operating form of leak detection shall be located at the most critical point to warn of a potentially hazardous situation.

b)Particular attention shall be paid to the following to ensure that by working on electrical components, the casing is not altered in such a way that the level of protection is affected. This shall include damage to cables, excessive number of connections, terminals not made to original specification, damage to seals, incorrect fitting of glands, etc.

•Ensure that apparatus is mounted securely.

•Ensure that seals or sealing materials have not degraded such that they no longer serve the purpose of preventing the ingress of flammable atmospheres. Replacement parts shall be in accordance with the manufacture's specifications.

NOTE

The use of silicon sealant may inhibit the effectiveness of some types of leak detection equipment. Intrinsically safe components do not have to be isolated prior to working on them.

11) Repair To Intrinsically Safe Components

Do not apply any permanent inductive or capacitance loads to the circuit without ensuring that this will not exceed the permissible voltage and current permitted for the equipment in use. Intrinsically safe components are the only types that can be worked on while live in the presence of a flammable atmosphere. The test apparatus shall be at the correct rating. Replace components only with parts specified by the manufacturer. Other parts may result in the ignition of refrigerant in the atmosphere from a leak.

12) Cabling

Check that cabling will not be subject to wear, corrosion, excessive pressure, vibration, sharp edges or any other adverse environmental effects. The check shall also take into account the effects of aging or continual vibration from sources such as compressors or fans.

13) Detection Of Flammable Refrigerants

Under no circumstances shall potential sources of ignition be used in the searching for or detection of refrigerant leaks. A halide torch (or any other detector using a naked flame) shall not be used.

14) Leak Detection Methods

The following leak detection methods are deemed acceptable for systems containing flammable refrigerants. Electronic leak detectors shall be used to detect flammable refrigerants, but the sensitivity may not be adequate, or may need re-calibration. (Detection equipment shall be calibrated in a refrigerant-free area.) Ensure that the detector is not a potential source of ignition and is suitable for the refrigerant. Leak detection equipment shall be set at a percentage of the LFL of the refrigerant and shall be calibrated to the refrigerant employed and the appropriate percentage of gas (25 % maximum) is confirmed. Leak detection fluids are suitable for use with most refrigerants but the use of detergents containing chlorine shall be avoided as the chlorine may react with the refrigerant and corrode the copper pipe-work. If a leak is suspected, all naked flames shall be removed or extinguished. If a leakage of refrigerant is found which requires brazing, all of the refrigerant shall be recovered from the system, or isolated (by means of shut off valves) in a part of the system remote from the leak. Oxygen free nitrogen (OFN) shall then be purged through the system both before and during the brazing process.

15) Removal And Evacuation

When breaking into the refrigerant circuit to make repairs or for any other purpose conventional procedures shall be used. However, it is important that best practice is followed since flammability is a consideration. The following procedure shall be adhered to:

•Remove refrigerant;

•Purge the circuit with inert gas;

• Evacuate;

•Purge again with inert gas;

Open the circuit by cutting or brazing.

The refrigerant charge shall be recovered into the correct recovery cylinders. The system shall be flushed with OFN to render the unit safe. This process may need to be repeated several times.

Compressed air or oxygen shall not be used for this task.

Flushing shall be achieved by breaking the vacuum in the system with OFN and continuing to fill until the working pressure is achieved, then venting to atmosphere, and finally pulling down to a vacuum. This process shall be repeated until no refrigerant in the system.

When the final OFN charge is used, the system shall be vented down to atmospheric pressure to enable work to take place.

This operation is absolutely vital if brazing operations on the pipe-work are to take place.

Ensure that the outlet for the vacuum pump is not closed to any ignition sources and there is ventilation available.

16) Charging Procedures

In addition to conventional charging procedures, the following requirements shall be followed:

Ensure that contamination of different refrigerants does not occur when using charging equipment. Hoses or lines shall be as short as possible to minimize the amount of refrigerant contained in them.

•Cylinders shall be kept upright.

•Ensure that the refrigeration system is earthed prior to charging the system with refrigerant.

•Label the system when charging is complete (if not already).

•Extreme care shall be taken not to overfill the refrigeration system.

•Prior to recharging the system it shall be pressure tested with OFN. The system shall be leak tested on completion of charging but prior to commissioning. A follow up leak test shall be carried out prior to leaving the site.

17) Decommissioning

Before carrying out this procedure, it is essential that the technician is completely familiar with the equipment and all its detail.

It is recommended good practice that all refrigerants are recovered safely. Prior to the task being carried out, an oil and refrigerant sample shall be taken.

In case analysis is required prior to re-use of reclaimed refrigerant. It is essential that electrical power is available before the task is commenced.

a)Become familiar with the equipment and its operation.

b)Isolate system electrically.

c)Before attempting the procedure ensure that:

•Mechanical handling equipment is available, if required, for handling refrigerant cylinders;

•All personal protective equipment is available and being used correctly;

•The recovery process is supervised at all times by a competent person;

•Recovery equipment and cylinders conform to the appropriate standards.

d)Pump down refrigerant system, if possible.

e)If a vacuum is not possible, make a manifold so that refrigerant can be removed from various parts of the system.

f)Make sure that cylinder is situated on the scales before recovery takes place.

g)Start the recovery machine and operate in accordance with manufacturer's instructions.

h)Do not overfill cylinders. (No more than 80 % volume liquid charge.)

i)Do not exceed the maximum working pressure of the cylinder, even temporarily.

j)When the cylinders have been filled correctly and the process completed, make sure that the cylinders and the equipment are removed from site promptly and all isolation valves on the equipment are closed off.

k)Recovered refrigerant shall not be charged into another refrigeration system unless it has been cleaned and checked.

18) Labeling

Equipment shall be labeled stating that it has been de-commissioned and emptied of refrigerant. The label shall be dated and signed. Ensure that there are labels on the equipment stating the equipment contains flammable refrigerant.

19) Recovery

When removing refrigerant from a system, either for service or decommissioning, it is recommended good practice that all refrigerants are removed safely.

When transferring refrigerant into cylinders, ensure that only appropriate refrigerant recovery cylinders are employed. Ensure that the correct numbers of cylinders for holding the total system charge are available. All cylinders to be used are designated for the recovered refrigerant and labeled for that refrigerant (i.e special cylinders for the recovery of refrigerant). Cylinders shall be completed with pressure relief valve and associated shut-off valves in good working order.

Empty recovery cylinders are evacuated and, if possible, cooled before recovery occurs. The recovery equipment shall be in good working order with a set of instructions concerning the equipment that is at hand and shall be suitable for the recovery of flammable refrigerants. In addition, a set of calibrated weighing scales shall be available and in good working order.

Hoses shall be completed with leak-free disconnect couplings and in good condition. Before using the recovery machine, check that it is in satisfactory working order, has been properly maintained and that any associated electrical components are sealed to prevent ignition in the event of a refrigerant release. Consult manufacturer if in doubt.

The recovered refrigerant shall be returned to the refrigerant supplier in the correct recovery cylinder, and the relevant waste.

Transfer note arranged. Do not mix refrigerants in recovery units and especially not in cylinders.

If compressors or compressor oils are to be removed, ensure that they have been evacuated to an acceptable level to make certain that flammable refrigerant does not remain within the lubricant. The evacuation process shall be carried out prior to returning the compressor to the suppliers. Only electric heating to the compressor body shall be employed to accelerate this process. When oil is drained from a system, it shall be carried out safely.

20) Transportation, Marking And Storage For Units.

Transport of equipment containing flammable refrigerants Compliance with the transport regulations.

Marking of equipment using signs compliance with local regulations.

Disposal of equipment using flammable refrigerants Compliance with national regulations.

Storage of equipment/appliances.

The storage of equipment should be in accordance with the manufacturer's instructions.

Storage of packed (unsold) equipment.

Storage package protection should be constructed such that mechanical damage to the equipment inside the package will not cause a leak of the refrigerant charge.

The maximum number of pieces of equipment permitted to be stored together will be determined by local regulations.